SERVICE POLICY

Effective 2026

This Policy provides information on the Idaho Falls Power (IFP) procedures for new and existing services and what will be required of a Customer desiring electric service. This Policy is based in part on current Idaho Falls City Code. It is to be used only as a guide and shall not be considered to be complete with respect to all possible service configurations or special or extenuating circumstances. Questions pertaining to this Policy should be directed to the Engineering Manager, or the Distribution Superintendent at (208) 612-8430. **Any deviations from this Policy must receive prior IFP written approval.**

IDAHO FALLS POWER ORGANIZATION

Idaho Falls Power Board Members:

Mayor

Lisa Burtenshaw

City Council

Michelle Ziel-Dingman

Brandon Lee

John Radford

Jim Francis

Jim Freeman

Kirk Larsen

City Attorney

Zachary H. Jones

General Manager (Interim)

Stephen Boorman, P.E.

Assistant General Manager

Jace Yancey

PROFESSIONAL ENGINEER
LICENSED
10454
STATE OF IDAHO
STEPHEN JOHN BOORMAN

Digitally signed by Stephen Boorman
Date: 2026.03.16 16:53:35-06'00'

Changes new to this edition:

1. **Minor grammatical, spelling, and clarifying edits have been made, along with enhancements to improve the clarity and readability of the policy.**
2. **Added Idaho Falls Power Organization signature page.**
3. **Changed conduit diameter from 2-1/2" PVC to 3" PVC for all residential service runs and from 2-1/2" PVC to 2" PVC on all primary runs. Clarified when "mule tape" is required to be installed and other specifications. (Section III.A.4) (Section III.C.10)**
4. **Cover may be reduced to 36" in special circumstances upon IFP written approval. (Section III. B. 1.)**
5. **Contractor shall provide and install concrete base or IFP approved foundation and install, IFP provided, commercial lighting control panel (Myers Power Products, Inc., model MEUG20-M100TS). (Section II. H. 1. a. 2.)**
6. **Updated the transformer specifications tables to reflect ampacity for 500 CU at 430 amps. Also, added 3750 kVA 480/277 to the table.**
7. **Clarified ground rod installation if rock is encountered. Increased and standardized ground sleeve exposure about finish grade (reveal) from six inches (6") to a minimum of nine inches (9") and a maximum of twelve inches (12").**
   (Section IV.A.1) (Section III.A.9)
8. **2" HDPE continuous duct is discouraged in open trench. When HDPE stick pipe is used all fused joints will be "debeaded." (Section III. A.4)**
9. **Contractors will be encouraged to purchase and install a pre-cast concrete pad instead of forming and pouring for three phase transformer pads. (Section IV. B. 1.)**
10. **Updated figures to include new height/depth requirements and various callouts to add more details on policy expectations and requirements.**
    (Revised figures: 1, 2, 3, 4, 5, 6, 7, 8, 10, 14, 15, 16, 27, 32 & 34)
11. **Contractor to ensure balanced load across phases and provide color coded secondary wire to indicate phasing in commercial development.**
    (Section II.B.7)
12. **Contractor/Customer will provide a two (2) year warranty ensuring construction work and installation is free from any defects in materials, workmanship, earthwork/trench integrity and new infrastructure.**
13. **Added clarification on meter clearances and labeling.**
    (Definitions) (Section V.H.1)
14. **Correction to reference of City Code from 10-3-5(Z)(8) to 11-2-6(R)(8).**
    (Section II.G.1

Table of Contents

I. DEFINITIONS: 8
II. SERVICE REQUIREMENTS 10
A. General Service Requirements: 10
B. Commercial Service Requirements 11
C. Commercial Service Requirements for Operation 12
D. Residential Service Requirements 12
E. Multi-Family and Single Family Attached Service Requirements 14
F. Construction and Temporary Service 14
G. Requesting Changes to Existing Services (service upgrades) 15
H. Illumination of Public Rights-of-Ways 15
I. Required Conductor Clearances 16
J. Fault Current Calculations 16
K. Motor Starting 17
III. TRENCH AND CONDUIT 19
A. General Requirements 19
B. Primary Conduit 20
C. Secondary Conduits 21
D. Fiber Conduits 23
IV. PADMOUNT EQUIPMENT REQUIREMENTS 24
A. Single-Phase Transformers 24
B. Three-Phase Transformers 24
C. Sectionalizing Cabinets, Ground Sleeves, Secondary Pedestals, and Fiber Boxes 25
D. Modifying Exterior Appearance of Equipment 25
V. GENERAL METERING REQUIREMENTS 25
A. Location of and Restricted Meters 25
B. Meter/Point of Service Disconnect 26
C. Determining Self-Contained or CT Metering 27
D. Residential Metering Requirements 27
E. Commercial Metering Requirements 27
F. Meter Bases 29
G. Removal of Meters 31
H. Meter Identification 31

I. Master Metering....31
VI. SECURITY LIGHTING....32
A. Program Requirements....32
VII. CUSTOMER GENERATION....32
A. Generation Facility Design and Installation Requirements....32
B. Generation Facility Design Specifications:....32
C. Generation Facility Net-Metering and Power Purchases....35
VIII. ELECTRIC VEHICLE CHARGING STATION PROGRAM REQUIREMENTS....36
A. Electric Vehicle Level 2 Charging Station Installation....36
IX. SMALL WIRELESS FACILITIES....38
A. Purpose.....38
B. Definitions.....38
C. Locations of Wireless Facilities and Related Ground Equipment.....40
D. Order of Preference for SWF Support Poles and attachments to existing facilities.....41
E. Guidelines on Placement....42
X. JOINT USE ATTACHMENT CONSTRUCTION STANDARDS AND POLICY....43
A. Purpose.....43
B. Application Procedures....43
C. Make-Ready Work....43
D. Pole Attachment Standards....43
E. Position and space....43
F. Clearances....44
G. Vertical Risers....44
H. Climbing Space....44
I. Anchors and Down Guys....44
J. Service Drops....45
K. Tagging....45
L. Pole Removal....45
M. Nonfunctional Attachments....45
XI. APPENDICES....46
A. Transfer of power service FAQ's....46
B. High Density Load Service (Crypto currency Data Mining Centers) FAQ's....47

I. DEFINITIONS:

CHARGING STATION: IFP-supplied equipment that is leased to a customer for the purpose of charging electrically powered vehicles.

CITY: City of Idaho Falls, Idaho.

COMMERCIAL: Development that is non-residential or, for the purpose of construction and maintenance of the electric infrastructure, a development that is Multi-Family Housing with three or more attached units with a meter pack (master-metered). (See International building code for more information about the commercial classification)

CONTRACTOR: Any person or entity who is doing work that will require electric service or other interaction from IFP. Contractor is a general term that can apply to one (1) or more property developer, owner, owners' agent, or other entity performing work at location.

CT METER: A metering system where the current is measured indirectly with a current transformer.

CUSTOMER: The person(s) who will be the owner(s) of the property where the service is provided and who shall be responsible for the ongoing costs of maintenance and service.

CUSTOMER-GENERATOR: A customer with a small generation facility (solar, wind, etc.) who has a net-metering agreement with IFP.

GENERATION EQUIPMENT: Equipment (solar panels, small wind, gas-generators, etc.) used in the generation of electricity.

ISPWC: Idaho Standards for Public Works Construction

IFP: The City of Idaho Falls, Idaho, dba Idaho Falls Power.

IFF: The City of Idaho Falls, Idaho, dba Idaho Falls Fiber.

INFILL LOTS: Platted or unplatted property left after development has been complete or that have been developed in the past and the structures have since been removed that may be subject to line extension fees.

MASTER-METERED: One (1) meter that measures the electrical service for more than one (1) living unit or commercial interest.

METER LABEL: Durable, all-weather custom engraved phenolic plastic nameplate with a minimum size of 3/4" tall x 2" wide x 1/16" thickness.

MOBILE HOME PARK: Development that has three or more stand-alone residential units built on parcel(s) under common ownership, wired to HUD standards, and typically mobile homes where each unit has a self-supported meter base, or that is master metered.

NEMA: National Electrical Manufacturers Association, organization that develops standards for electrical equipment.

NESC: National Electric Safety Code, which is the governing standards for electric utilities.

NET ENERGY: The difference between the electricity consumed by the Customer-Generator and the electricity produced by the Customer-Generator's Generation equipment and facility.

NET-METERING: A system in which a small generation facility, (e.g., renewable energy generators), are connected to the power grid and surplus power is transferred onto the grid, allowing customers to offset the cost of power drawn from IFP.

PRIMARY: The parts of the IFP system that are operated at a nominal 15kv phase-phase. Actual operating voltages are 12,400 volts phase-phase and 7,200 volts phase-ground.

RESIDENTIAL: Single Family Detached Home (independent meter attached to a wall), Multi-Family Housing (two (2) -units with a meter pack or master-metered), and Single Family Attached (individual service to each unit with meter attached to the individual unit).

SECONDARY: The parts of the IFP system that are operated below 600 volts.

SELF-CONTAINED METER: A non-instrumented single-phase meter under four hundred (400) amps (class 320) or a three- (3) phase meter under two hundred (200) amps.

II. SERVICE REQUIREMENTS

SERVICE FEES: CONSISTENT WITH IDAHO FALLS CITY CODE, ALL FEES OR COSTS, APPLICABLE TO LINE EXTENSIONS FOR RESIDENTIAL OR COMMERCIAL INDIVIDUAL CUSTOMERS OR DEVELOPMENTS SHALL BE PAID IN ADVANCE OF ANY INSTALLATION OF ELECTRICAL INFRASTRUCTURE. APPLICABLE FEES ARE PUBLISHED IN THE FEE SCHEDULE ESTABLISHED BY CITY COUNCIL RESOLUTION.

A. General Service Requirements:

1. A Customer desiring new electric service from IFP must first secure a building permit from the City Building Department. For all three-phase and commercial projects, it is required that the Customer coordinate service plans directly with IFP prior to seeking a building permit. The Customer shall provide a completed transformer load sheet and information necessary for IFP to provide electrical service, including but not necessarily limited to: preferred service location (overhead or underground service), single-phase or three-phase service, total connected load, electric heat and air conditioning load, required voltage, and the number and size of motors with ratings greater than ten (10) horsepower.

2. The International Building Code and International Residential Code determines if a building is commercial verses residential for the purpose of construction and maintenance of the electric infrastructure. Power consumption charges and line extension fees are based on the occupancy type and are listed in The Fee Schedule Established by City Council Resolution.

3. For development in outlying areas where IFP and IFF do not have existing infrastructure, the developer may incur additional costs associated with installing power and fiber infrastructure to the site. These costs may be above and beyond the standard per-lot, per-unit, or other line extension fees. Additionally, the developer may be required to provide offsite easements necessary for the line extension to the site.

4. The Customer is solely responsible for the selection, installation, and maintenance of all electrical equipment and wiring, on the load side of the point of delivery (other than IFP's meters and apparatus). The Customer shall be responsible to provide adequate protective measures for all electric motor installations.

5. The Customer shall be responsible to install and maintain surge suppressors, auxiliary power units or other protective devices for the protection of computers, computer software and programming, televisions, or other equipment sensitive to voltage spikes, surges, sags, transients, noise interruptions or outages.

6. The Customer shall install and maintain all suitable protective devices and equipment to protect the Customer, life and/or property, from harm or injury from electric current because IFP shall assume no duty to warn or to otherwise assist the Customer in the selection of or use of electrical appliances, tools, equipment, or facilities.

7. Whenever a Customer's equipment has characteristics which causes interference (e.g., harmonics, transients, waveform distortions, fluctuations, etc.) with IFP's service to other Customers, the Customer causing the interference shall make changes in such

equipment or provide, at Customer's expense, additional equipment to eliminate the interference. Power quality of the Customer shall meet the IEEE 519 standard, ANSI C84.1 standard, and City Code 8-5-26.

8. Padmounted equipment (including ground sleeves / pedestals, etc.) shall not be provided or set until curb and gutter have been installed. Approval from IFP is required prior to any deviation from this requirement.

9. IFP's required easements for the electric and fiber lines shall be identified and designated prior to construction. In general, easements for electric and fiber service shall be twelve feet (12') in width. Along rights-of-way (ROW) easements shall be a minimum of fifteen feet (15'). Proposed easement width may vary depending on road classifications and IFP future planning needs.

10. New utility easements of less than twelve feet (12') in width require prior approval from IFP design staff. It is the Customer's responsibility to have IFP's designated easements surveyed and dedicated to the CITY.

11. All new overhead services shall attach to a weather head mounted on 2" rigid conduit. House knobs will no longer be allowed for use.

B. Commercial Service Requirements

1. Commercial services are defined as Non-residential and Multi-Family Housing that has three or more units attached with a meter pack (see International Building Code). Exceptions on case-by-case basis shall be coordinated by IFP and Building Department.

2. Prior to design, every commercial and industrial Customer shall provide the following information to IFP:

a) A plot plan indicating the preferred service entrance location.

b) If previously recorded public utility easements or are not available, provide easements to IFP for underground power cable, as indicated on the marked-up plot plan described above. If the indicated easement locations present problems, the Contractor is responsible to obtain permission for a different routing from IFP.

c) Proposed transformer location (final determination will be made by IFP)

d) A completed transformer load sheet (attached to review sheet or by pdf from IFP design)

e) All electrical requirements including number of phases, voltage, connected single-phase and three-phase loads. Determine location of loads, approximate size of loads and possible future load needs. All three-phase underground installations shall be served with Y connected secondary only (i.e. 120/208 or 277/480).

f) No service work, cable pulls, or connects will be made unless the site address is posted in a conspicuous place.

3. Determine location of service entrance, approximate size of loads, and an estimate of future electric loads

4. Provide a meter base, standard power riser, weather head, and/or suitably anchored attachment point to allow connection to IFP's designated service tap point. Install IFP provided CTs.

5. Provide necessary easements to connect the Customer to IFP's designated interconnection point. Easements are required for primary conductor only, except in rare cases where an easement for overhead secondary conductor may be necessary (because it crosses property boundaries).

6. IFP will then provide the meter and current transformers and aerial overhead conductor. Note that no Customer owned equipment will be permitted on IFP's poles.

7. Contractor / Customer is required to provide and install all secondary conductor and to ensure adequate coil at each end for IFP to terminate. When installing multiple runs, Contractor / Customer must provide color-coded wire to indicate phasing. All three phase 120/208V meter packs must be balanced equally per phase.

C. Commercial Service Requirements for Operation

1. The Customer is solely responsible for the selection, installation, and maintenance of all electrical equipment and wiring, on the load side of the point of delivery (other than IFP's meters and apparatus). The Customer shall be responsible to provide adequate protective measures for all electric motor installations.

2. The Customer shall be responsible to install and maintain surge suppressors, auxiliary power units or other protective devices for the protection of computers, computer software and programming, televisions, or other equipment sensitive to voltage spikes, surges, sags, transients, noise interruptions or outages.

3. The Customer shall install and maintain all suitable protective devices and equipment to protect the Customer, life and/or property, from harm or injury from electric current because IFP shall assume no duty to warn or to otherwise assist the Customer in the selection of or use of electrical appliances, tools, equipment, or facilities. Whenever a Customer's equipment has characteristics which causes interference (e.g., harmonics, transients, waveform distortions, fluctuations, etc.) with IFP's service to other Customers, the Customer causing the interference shall make changes in such equipment or provide, at Customer's expense, additional equipment to eliminate the interference. Power quality of the Customer shall meet the IEEE 519 standard, ANSI C84.1 standard, and City Code 8-5-26.

D. Residential Service Requirements

1. Residential services are defined as a Single Family Detached Home, Multi-Family Housing (two (2) -units with a meter pack or master-metered), and Single Family Attached (individual service to each unit with meter attached to the individual unit). IFP provides and installs the secondary service wire to the individual unit or duplex.

2. Line extension fees will be established by Resolution of the City Council. Additional clarification for infill lots are as follows:

a) Infill lots that were planned with services and that have adequate IFP infrastructure are not subject to the per lot fee or other line extension fees. If it is determined that the infrastructure needs upgraded to serve than this will be billed as an extra line extension fee.

b) Infill lots that were not planned as a residential lot are subject to the per lot fee.

c) Infill lots that have no IFP power infrastructure fronting or adjacent to the property are subject to the per lot fee plus all other applicable line extension fees to provide power to the property as determined by IFP.

3. New underground residential electric systems shall be installed in front lot locations and shall be determined by IFP. See Section III for trenching and conduit requirements.

4. Service Entrance and Meter Base:

a) The meter shall be located within five feet (5') of the nearest front corner of the house to the existing transformer or pedestal. Conduit is to have a maximum of 360° degree of bends. Services shall conform to Attached Figures of this Policy. Meter location requirements herein are to be used only as a guide and shall not be considered complete with respect to all possible service configurations or special extenuating circumstances. Any deviation of meter placement must have prior, written approval from IFP. The centerline of the meter should be five feet six inches (5'6") above the finished grade or walkway. If structural details prevent this, the centerline height shall be not less than four feet (4') or more than six feet (6').Power Cables:

(1) IFP will provide and install the necessary primary cable. IFP will provide and install the necessary secondary cable for services up to three hundred (300) amps.

(2) The cables will be installed in the Contractor provided conduit to connect the Contractors' service point to the City's pad-mounted transformer or pedestal. The Contractor is required to establish a final grade compacted to a minimum of ninety-five percent (95%) of maximum density at each transformer and service pedestal on location large enough for placement of IFP's transformer pad and/or pedestal. See Attached Figures of this Policy. The Contractor should coordinate work with IFP.

(3) The Contractor's service entrance equipment must be in place and approved by the electrical inspector before final hookup. Installed conduit shall be inspected by IFP to ensure proper conduit depth and installation. Cable will not be installed until the trench has been backfilled.

5. Residential Secondary Service Ownership:

a) IFP owns the secondary service wire from the transformer or secondary pedestal to the service connection point. See Attached Figure 34 of this Policy for more detail.

6. High Voltage Transformers and Sectionalizing Cabinets:

a) The high voltage equipment shall not be enclosed in any manner which will restrict the dissipation of heat. A ten foot (10') minimum clearance and access must be maintained in front of the cabinet door. A two-foot (2') clearance should be maintained on all other sides of the equipment. Fences or landscaping installed within this clearance will be removed at the Customer's expense should servicing be required. See Attached Figures of this Policy.

b) Additionally, overhead service wire length has a maximum length of one hundred twenty-five feet (125').

E. Multi-Family and Single Family Attached Service Requirements

1. Conduits and conductors used to service the building will be determined by IFP for Residential only (up to two (2) -units sharing a meter pack or individual service to each unit with meter attached to the individual unit). For Commercial applications (three units or more with a meter pack) conduits and conductors will be determined and provided by the Contractor/Customer. See Section III for trenching and conduit requirements. Secondary conductor(s) will be terminated at one (1) point Customer's premises (i.e., main breaker, disconnect or similar tap point). IFP's conductor(s) shall not be used as a bus in gutters, etc.

2. A Contractor / Developer can install a meter pack as an alternative to individual meters on individual walls. Conduits and conductors can penetrate the firewall on Single Family Attached dwellings (see building regulations and coordinate with Building Department). Easements and agreements will need to be in place between each Property Owner / Homeowner's association. Contractor / Owner shall communicate to IFP the type of construction when requesting approval.

3. Line extension fees are based on occupancy and will be established by Council Resolution. Multi-Family Housing line extension fees are only applicable when there is a meter pack of three (3) or more units.

a) Typically, for Mult-Family Housing, IFP recommends that the Contractor install meter packs. This recommendation is based on the close proximity of units and other infrastructure. If meter packs are not installed, the fees will be assessed as Residential.

F. Construction and Temporary Service

1. IFP will charge a fee for the installation and removal of power for a temporary facility to existing infrastructure (e.g., within thirty feet (30') of underground or one hundred twenty-five feet (125') from overhead tap point). This fee will be established by Resolution of the City Council and shall be paid at the City Building Department at the time of building permit application. Due to varied field conditions, the Contractor or Customer will need to coordinate a site visit with IFP staff at (208)612-8430 to determine installation requirements. If providing the service requires pole installation or transformer placement, an additional one-time fee shall be paid to IFP prior to the installation of the temporary service. Temporary Service request forms with current associated fees are available at the Building Department.

2. Examples of temporary facilities include a construction trailer or Christmas tree lot, which would require a line extension and/or transformer. Temporary power service shall be limited to three (3) months post completion for construction projects or to one (1) year of continuous service for non-construction services.

3. The Contractor or Customer must provide service pole and meter base, and have it approved by the City's electrical inspector. The service pole cannot be more than one hundred twenty-five feet (125') from the designated IFP interconnection point. The service pole shall be tall enough to allow for appropriate traffic clearance and be strong enough to support the service conductors.

4. Generally, three-phase temporary power is not permitted. Contractor or Customer to submit a request to IFP for their assessment. If approved, line extension fees will be based by Resolution of the City Council.

G. Requesting Changes to Existing Services (service upgrades)

1. Any Customer may request a change to an existing service, including upgrades, expansion, extension, or relocation. Customers requesting change in existing service shall pay labor and materials costs associated with the service change. All payments will be made in advance of the change in service. Residential service upgrades must comport to City Code 11-2-6(R)(8) for zoning. Primarily, the use of utilities shall not be beyond that reasonably used for residential services e.g., cryptocurrency mining would not be considered a residential use.

2. The Contractor or Customer shall be responsible for costs incurred by IFP for the repair of any of its facilities damaged by the Contractor or Customer or a third party working on behalf of the Contractor or Customer. IFP will provide information and services in advance of maintenance or construction activities (such as dropping and reconnecting overhead service lines for tree trimming) at no charge, if scheduled during regular business hours.

H. Illumination of Public Rights-of-Ways

1. It shall be the Customer or Contractor's responsibility to provide illumination (streetlights) along or within the public rights-of-way contained within a new development.

a) IFP will coordinate with the Developer regarding design and construction responsibilities for lighting.

(1) When determined by IFP, Contractor to utilize flood seals and compact compression connector Burndy YPC2A8U bg die or w-bg die; or approved equal for all connector taps.
(2) When determined by IFP, Contractor shall provide and install concrete base foundation or IFP approved foundation and install IFP provided, commercial lighting control panel (Myers Power Products, Inc., model MEUG20-M100TS).

(3) When determined by IFP, Contractor shall provide conduit, #10 CU THHN conductor (red-black-white-green), flood seal connectors in J-box when installing three or more streetlights in (ROW). (See Figures 26-27)

(a) IFP will pull and provide the secondary wire in the Contractor's supplied conduit between the transformer and the lighting control panel.

2. All new light pole foundations and lighting conduits shall be constructed by the Contractor in accordance with current Service Policy Figure 10, ISPWC (Idaho Standards for Public Works Construction), and City of Idaho Falls standard specifications. IFP will furnish to the Contractor a bolt hole template (pending availability), anchor bolts, nuts, washers, grounding butt plate, and ground wire needed for the installation of the light poles. Contractor may utilize a precast light pole base as long as it matches all specifications.

a) The Customer shall purchase or construct a concrete light pole base per current IFP specifications in the location indicated on the IFP Contractor Map. The final light pole location will be determined by IFP. If the Customer chooses to pour in place the pole base, IFP must be contacted for inspection of pole base prior to the base being poured. Light Pole base shall conform to Attached Figures of this Policy. A light pole will not be installed on the pole foundation until it has cured a minimum of seven (7) days. When the temperature is forty (40º) degrees or lower the pole foundation shall be covered with an insulated tarp.

3. Contractor to ensure adequate backfill at proposed light pole bases and utilize ¾" gravel to maximize compaction.

4. IFP will install poles and luminaires along or within the public rights-of-way with the cost of materials paid by the Contractor prior to installation, except in the commercial applications described above.

I. Required Conductor Clearances

1. See Service Policy Figures for required clearances of overhead power lines to driveways, parking lots, alleys, areas of farm and construction equipment, pedestrian traffic, vehicular traffic, railroads, water ways, and other miscellaneous clearance exhibits. If the clearance is not shown, please contact IFP staff. Note all clearances are derived from the NESC.

2. Contact IFP at (208) 612-8430 for permits, inspections, authorizations, and clearances not addressed in this Policy.

J. Fault Current Calculations

1. The NEC requires that new service entrance equipment is rated to interrupt the available fault current. To assist customers, IFP is providing the tables below showing a calculated maximum potential secondary fault current (Isc) and the information necessary to allow the calculations of the maximum fault current for most applications.

2. The tables are built with the following assumptions:

a) The tables do not use an infinite buss but the maximum primary fault current of IFP's system which is 8000 amps.

b) The tables were developed with a minimal 15 feet of secondary conductor (wire) is installed from the transformer. For a more accurate calculation the customer can use the actual length of conductor and actual conductor size. Calculating tools such as Eaton Bussmann's FC^2 application can be used.

K. Motor Starting

1. Motor starts may cause unacceptable disturbances to IFP's distribution and transmission systems or the service of other customers. It will be the CUSTOMERs responsibility to correct such disturbances including but not limited to installing a motor start device i.e., reduced-voltage or soft-start motor controls or variable frequency drives (VFD), or modifications to IFP's facilities at the CUSTOMER's expense, in compliance with current local laws, ordinances, and state tariffs.

2. Upon the CUSTOMER's request, IFP will furnish permitted starting currents that are based on frequency of starts and time of day the motors will be started and impedance of the distributions system.

3. IFP may limit the maximum size and type of any motor that may be operated at any specific location on its system.

3-Phase Padmount Transformers					
Transformer KVA	Secondary Voltage L-L	Secondary Voltage L-N	Lowest %Z	Isc w/ 15ft Wire	Wire Size
45	208	120	2.8	4216	4/0
75	208	120	0.9	17773	4/0
75	480	277	1.3	6508	4/0
112.5	208	120	1.2	22129	1-500
112.5	480	277	1.9	6668	4/0
150	208	120	1.1	30138	1-500
150	480	277	1.2	13147	4/0
225	208	120	1.5	35161	2-500
225	480	277	1.4	17074	1-500
300	208	120	1.4	48886	3-500
300	480	277	1.3	23330	1-500
500	208	120	1.5	71114	4-500
500	480	277	1.5	32504	2-500
750	208	120	5.4	34719	5-500
750	480	277	3	25812	3-500
1000	208	120	5.8	42437	7-500
1000	480	277	5.5	19591	3-500
1500	480	277	5.6	27583	5-500
2000	480	277	5.6	35237	6-500
2500	480	277	5.5	42818	7-500
3750	480	277	5.75	56499	11-500

1-Phase Padmount Transformers					
Transformer KVA	Secondary Voltage L-L	Secondary Voltage L-N	Lowest %Z	15ft 1/0 AL Isc L-L	15ft 1/0 AL Isc L-N
15	240	120	1.1	5008	6192
25	240	120	1	8355	9246
37.5	240	120	1.6	7931	8895
50	240	120	1	13950	13131
75	240	120	2.4	9952	10487
100	240	120	1.3	18221	15395
167	240	120	1.8	20181	16286
1-Phase Polemount Transformers					
Transformer KVA	Secondary Voltage L-L	Secondary Voltage L-N	Lowest %Z	15ft #2AL Isc L-L	15ft #2AL Isc L-N
15	240	120	1.1	4721	5382
25	240	120	1	7585	7549
37.5	240	120	1.6	7234	7314
50	240	120	1	11928	9954
75	240	120	2.4	8878	8357
100	240	120	1.3	14917	11202
167	240	120	1.8	16206	11667

III. TRENCH AND CONDUIT

A. General Requirements

1. Please contact the applicable IFP Design staff as noted on the approval drawings or through the main IFP engineering office at (208) 612-8430 prior to starting any trench and conduit work.

2. All conduit installed by or for IFP/IFF shall be for the exclusive use of IFP/IFF. Builder/contractors are required to coordinate with Idaho Falls Power regarding future use conduit associated with Electric Vehicle charging infrastructure.

3. IFP requires all IFP-owned conductor to be in conduit. The Customer shall provide and install all conduits as required from the IFP identified interconnection location through new or existing easements to the Customer's transformer pad as set out in Section 2.A.1 of this Policy. In the event it is necessary for IFP to loop feed through the Customer's property, the Customer may be required to open an additional trench to place conduit from the transformer to an exit point from the Customer's property. The Customer may also be required to provide easements for the trench. All electric conduits shall be PVC Schedule 40 (see note 3 and 4 for exceptions). All elbows shall be PVC Schedule 40 large radius sweep (36") or as otherwise specified by IFP (see note 3 and 4 for exceptions). At the discretion of IFP design staff, fiber glass elbow may be required. RGS elbows and conduit must be used at riser poles or where conduit will be exposed out of the ground. Conduits must be capped and labeled to identify routing. Conduit must be marked per IFP standards e.g., standard 2-in. x 4-in. piece of wood, rebar, tracer wire, etc. No conduit run shall have more than 360 degrees of bends. Maximum lengths of conduit runs shall be determined by IFP. Conduit shall only be bent with approved methods (i.e., blanket warmer or rigid conduit bender). No torches allowed.

4. As specified on the Contractor Map for proposed 1/0 single phase primary conductor, 2" PVC Schedule 40 is to be used. HDPE continuous duct can only be used with IFP approval and is discouraged in open trench due to thermal expansion that causes lateral movement (snaking), warping and fitting failure.

   a) If HDPE continuous duct is approved for open trench, is to be red in color or black with red stripes (red conduit preferred) and if possible, ordered with "IFP" stamped on conduit. Contractor shall "debead" all fused joints with HDPE stick pipe, if applicable. Contractor must transition HDPE to 2" PVC Schedule 40 large radius sweep (36") with Perma-Guard/UL fittings by Arnco Shur-Lock II or approved equal by IFP.

5. On <u>all conduit runs</u> of 75 feet or greater (to include all primary, all secondary and all secondary services to meter)the contractor will install 2500 lb. "mule tape". When available, and only if requested, IFP will provide used mule tape.

6. Contractor will install pull string for fiber optic conduit runs (future use conduit). Developer / Contractor shall provide all construction staking and layout of new electrical facilities per design.

7. All conduit, including bell ends, shall be supplied and installed by the Contractor. Bell ends shall be installed at transformers, secondary pedestals, sectionalizing cabinets, and light pole locations. See attached Figures of this Policy for installation guidelines. Conduits must be capped and labeled to identify routing.

8. In cases where the contractor cannot place the ground rod at the correct depth, the following steps should be taken.

a) Try to place the rod at an angle.

b) Bend ground rod to reach the proper height of the ground rod in the basement. Do not cut the ground rod if possible. Place #2 copper wire (attached to the rod) and run 20' along the trench.

9. Contractor shall provide and honor a warranty/guarantee ensuring construction work and installation is free from any defects in materials, workmanship, earthwork/trench integrity and new infrastructure for a duration of two (2) years after "City acceptance." The Contractor must ensure that the trench does not settle, transformer pads or other pedestals remain level, and finished product meets IFP standards.

B. Primary Conduit

1. The minimum power trench shall have a minimum depth of fifty-four inches (54") and maximum depth of sixty inches (60") below finish grade (Conduit to be installed 48" below finish grade). Including 6" of sand bedding below and above top of conduits. Cover may be reduced to 36" in special circumstances upon IFP written approval. See below for bedding requirements. Minimum trench width shall be twenty-four inches (24"), unless otherwise noted. Before final backfill, IFP shall be notified when the conduit is in place. IFP will inspect all conduit installations before backfilling for proper depth and installation. Trench to be backfilled within two weeks of IFP conduit installation. Failure to obtain an inspection prior to backfill may result in the re-excavation of the trench.

2. Minimum primary conduit depth can be reduced to eighteen inches (18") of cover below final grade through basalt or other rock upon prior approval of IFP. Rigid galvanized steel (RGS) conduit shall be provided and installed by the Contractor where trench depth is less than forty-eight inches (48"). IFP will specify the conduit size.

3. IFP will specify the conduit size. Contact applicable IFP staff upon completion of pulling a mandrel through the conduit to ensure the conduit is free from obstructions. Any additional or future costs due to broken, damaged, obstructed or poorly assembled conduits will be paid by the Customer.

4. IFP will provide the pole and all primary conductors, if crossing existing streets with overhead primary conductor to a pole located near the new service location. The Contractor shall provide and install the first length (i.e. ten feet (10') of RGS conduit) up the pole above the contractor supplied RGS elbow. All elbows at the base of the pole shall be a large radius three-foot (3') RGS steel. All conduits installed on IFP poles must be mounted on approximately eight-inch (8") standoffs, supplied by IFP.

5. If an underground road crossing is made, the Contractor will provide all conduit and will bore conduit beneath the roadway or provide a trench in which to install conduit. The use of high-density polyethylene (HDPE) continuous conduit shall be used at select road crossing locations with prior approval from IFP. Conduit shall be Perma-Guard/UL and fittings shall be Arnco Shur-Lock II or an approved equal approved by IFP. IFP will inspect all conduit installations before backfilling for proper depth and installation. Trenches across existing roadways must also be approved by the City Public Works Department.

6. A minimum of six inches (6") of sand bedding is required above and below all conduits. An IFP staff may determine that the native soil is suitable for bedding material. Additionally, bury/caution tape shall be buried two feet (2') above the top of conduit. IFP will inspect all conduit installations before backfilling for proper depth and installation. Prior to cable installation, trenches must be backfilled and transformer and sectionalizing cabinet ground sleeves as well as secondary pedestals must be in place.

7. In all cases the Contractor shall be responsible for backfill and compaction of cable trenches and repair of street crossings. Per City standards, all electrical trenches shall be compacted to a minimum of ninety-five percent (95%) of maximum density to prevent settlement. Failure to properly repair the street wherein defects (e.g. settlement) appear within one (1) year will result in the City billing the responsible party for all costs incurred by the City to fix the roadway.

8. A minimum of one foot (1') clearance shall be maintained between primary high voltage cable and all other utilities and service voltage cables, except at crossings (where a separation should exist to allow future repairs of either utility approximately two inches (2") minimum).

C. Secondary Conduits

1. The trench for secondary conduit shall have a minimum depth of thirty inches (30") below final grade. Minimum trench width shall be twenty-four inches (24"), unless otherwise noted. Before final backfill, IFP shall be notified when the conduit is in place. IFP will inspect all conduit installations <u>before</u> backfilling for proper depth and installation. Trench to be backfilled within two weeks of IFP conduit installation. Failure to obtain an inspection prior to backfill may result in the re-excavation of the trench.

2. Minimum secondary conduit depth can be reduced to eighteen inches (18") of cover below final grade through basalt or other rock upon prior approval of IFP. Rigid galvanized steel (RGS) conduit shall be provided and installed by the Contractor where trench depth is less than thirty inches (30"). IFP will specify the conduit size.

3. IFP will specify the conduit size (exception: commercial secondary conduit). Contact applicable IFP staff upon completion of pulling a mandrel through the conduit to ensure the conduit is free from obstructions. Any additional or future costs due to broken, damaged, obstructed or poorly assembled conduits will be paid by the Customer.

4. The Customer provides, installs, and retains ownership of all commercial secondary service conductors and conduits from building (or load) to transformer (or source).

5. Contractor / Developer shall not terminate secondary conductor on the lugs of the common bus work or point of termination until IFP line crews can perform a continuity check or 'wring out' the conductors.

6. When service can be met from an existing power pole, the Contractor shall install all secondary cable to the pole and shall provide sufficient secondary cable to reach from the pole top connection point to the Customer's meter base or other point of connection. The Customer shall provide and install the first length (i.e. ten feet (10') RGS conduit up the pole above the contractor supplied RGS elbow. All conduits installed on IFP poles must be mounted on approximately eight inches (8") standoffs, supplied by IFP. Commercial secondary trench and cable are the Customer's responsibility, and no easements will be required by IFP. All future maintenance, locating, and repair of secondary shall be the Customer's responsibility.

7. Contractor shall provide and install necessary meter bases, current transformer (CT) boxes, and install IFP provided CTs in CT boxes. Commercial metering requirements are contained in Section V. of this Policy, with additional commercial metering requirements in Section V.E. of this Policy.

8. Following such installations, IFP will install meter, meter wiring, etc.; place a transformer on the concrete pad; pull primary cable through Contractor-installed conduit; and connect primary cables to the primary terminals of the pad-mounted transformer. IFP makes up secondary connections in the transformer and provides connectors for standard cable up to and including five hundred (500) kcm. If greater than five hundred (500) kcm cable is to be used, the Contractor provides connectors and/or other special facilities. Finally, IFP connects the primary cable to its power system at the designated tap point after all requirements are met.

a) Paralleled secondary commercial conductors shall be marked with color coordinated tape to ensure phases interrelate.

9. Where the service is fed from an overhead transformer, the Contractor or Customer will install conduit to the pole where the transformer is mounted.

a) The Contractor or Customer will install rigid galvanized, three- (3') foot radius elbow and one (1) ten (10') foot length of rigid galvanized steel conduit up the pole (for residential the size of conduit is to be determined in Contractor's Map, for commercial the size is determined by Electrician).

b) The Contractor or Customer will provide enough conductor to make connection to the transformer and coil it at the top of the end of the riser.

c) IFP will inspect all conduit installations before backfilling for proper depth and installation. Meter base shall be framed and braced before the power cable will be pulled into the base. After IFP inspects conduit, an authorization for backfill sticker will be placed on conduit or meter base.

d) All trenches will be compacted to a minimum of ninety-five percent (95%) of maximum density to prevent settlement.

10. It shall be the property owner's responsibility to maintain integrity of secondary conduit at their expense. On residential secondary conduit extensions, IFP will provide transformer ground sleeves, ground rods, and secondary pedestals. Following IFP providing the ground sleeve and pedestal, and before transformer or service pedestal is installed, the Contractor shall install one ten-foot (10') length of three inch (3") schedule 40 PVC secondary conduit with three foot radius (3') sweep, if required from each transformer and/or pedestal on approximately a 45° degree angle into each lot to be served with electrical service (unless otherwise noted on Contractor's Map). See Attached Figures of this Policy.

a) Contractor / Customer will connect to existing conduit stubs and extend to the house per Figure 11 and Figure 32 of the attached Figures.

(1) Schedule forty (40) PVC conduit is acceptable for the riser and the two-foot (2') radius elbow at the house if mounted within the framed wall. If surface mounted on the house or self-supported-meter base, the riser to the meter base and adjacent elbow shall be RGS or schedule eighty (80) PVC with PVC slip coupling.

b) The Contractor or Customer must ensure that conduit is installed for all new secondary runs or when upgrading a self-supported-meter base, extending it all the way from the transformer or secondary pedestal to the meter base. Example of this would be in a mobile home park.

c) Three-inch (3") conduit with three-foot radius (3') sweeps shall be required from pedestal or transformer to the meter panel if residential service has up to a 400-amp panel. Coordinate with IFP.

11. Any residential secondary service that is connected from another secondary service or has multiple services interconnecting (daisy chain) will be deemed Commercial. IFP will not be responsible nor maintain those services, unless prior approval by IFP.

D. Fiber Conduits

1. Contractor shall provide and install two-inch (2") future use conduit (fiber conduit) in the trench per Contractor's Map. With prior approval from IFP, orange one and a quarter inch (1.25") HDPE conduit may be used instead. In new residential subdivision construction, contractor shall provide and install one-inch (1") diameter future-use conduit stubs to each lot of a minimum of ten-foot (10') in length to follow and end in the same location as the secondary power conduits.

2. Fiber conduit shall be stubbed up into IFF-supplied fiber boxes and cut off between (2") to (4") above the bottom of fiber box.

a) Location of fiber boxes shall be determined by Idaho Falls Power. The Contractor or Customer must install the IFF-supplied fiber marker in front of each fiber box.

3. For residential construction, the Contractor or Customer shall provide and install a one-inch (1”) future-use (fiber conduit) from existing fiber box to the house. Alternatively, the Contractor or Customer may utilize IFP-supplied three-quarter inch (3/4”) micro duct (see figure 32). If provision is provided for interior wall access utilize the 1” PVC conduit as a sleeve. If no interior provision is provided, then coil the (3/4”) micro duct at finish grade beneath the meter base. For commercial construction, the Contractor or Customer shall provide and install a two-inch (2”) future-use (fiber conduit) from the existing fiber box to the building. This requirement also applies to meter packs in multi-family dwellings as defined previously in the policy. If no meter pack is present, proceed with individual runs of future-use conduit as specified for residential construction.

a) Minimum of twenty-four inches (24”) of burial depth.

4. Contractor or Customer to ensure both ends of the conduit are capped off with a PVC cap and marked Idaho Falls Fiber. Contractor or Customer shall ensure that end of conduit will be capped and marked in accordance with IFP standards e.g. standard 2-in. x 4-in. piece of wood.

IV. PADMOUNT EQUIPMENT REQUIREMENTS

A. Single-Phase Transformers

1. Transformer ground sleeves and ground rods shall be provided by IFP, but shall be picked up at the IFP warehouse and/or IFP designated facility and installed by the Contractor in conformance with Attached Figures of this Policy. The ground sleeve location shall be compacted to a minimum of ninety-five percent (95%) of maximum density prior to placement. The top of the transformer pad shall be installed a minimum of nine inches (9”) and a maximum of twelve inches (12”) above final grade. The pad shall be level and aligned accordingly. A minimum ten-foot (10’) clear area is required in front of the transformer and a minimum of two-foot (2’) clearance is required on the other three (3) sides of the transformer. The transformer location will be determined by IFP.

B. Three-Phase Transformers

1. The Customer shall purchase or construct a concrete transformer pad per current IFP specifications in the location indicated on the marked-up plot plan. A minimum ten-foot (10') clear area is required in front of the transformer pad and a minimum of two-foot (2') clearance is required on the other three (3) sides of the pad. The final transformer location will be determined by IFP. The purchase of a pre-cast concrete pad is recommended and preferred. If the Customer chooses to pour their own pad, IFP must be contacted for inspection of transformer form prior to the pad being poured. Pad design shall conform to Attached Figures this Policy. Pad design shall meet or exceed to Attached Figures this Policy. The pad location shall be compacted to a minimum of ninety-five percent (95%) of maximum density prior to pad placement. The pad shall be level and aligned accordingly. No more than eight (8) conduits on the secondary side of a transformer shall be installed. Transformer ground sleeves and ground rods shall be provided by IFP, but

shall be picked up at the IFP warehouse and installed by the Contractor in conformance with Attached Figures of this Policy.

a) When more than eight conduits are required for the secondary service, coordinate with IFP for the installation of a secondary cabinet to be located adjacent to the transformer. This secondary cabinet will also be used for the CT metering equipment in many applications.

C. Sectionalizing Cabinets, Ground Sleeves, Secondary Pedestals, and Fiber Boxes

1. Primary sectionalizing cabinet, ground sleeves, ground rods, secondary pedestals, and fiber boxes shall be provided by IFP, but shall be picked up at the IFP warehouse and/or IFP designated facility and installed by the Contractor in conformance with Attached Figures of this Policy. The top of the sectionalizing ground sleeve shall be installed a minimum of six inches (6”) above final grade. A minimum ten-foot (10’) clear area is required in front of the primary voltage switch cabinet and a minimum of two-foot (2)’ clearance is required on the other three (3) sides. The location of the ground sleeves, ground rods, and secondary pedestals will be determined by IFP.

D. Modifying Exterior Appearance of Equipment

1. Painting of IFP padmounted equipment shall not be allowed. Wrapping will be allowed with preapproval only. Conditions include; all of standard warning placards and transformer data to be included in the wrap, the wrap cannot cover the fins due to cooling requirements, and no commercial advertising.

V. GENERAL METERING REQUIREMENTS

These general metering requirements cover only the common meter installations. Any non-conventional, infrequent, or special applications or installations should receive prior approval by IFP and are not included in these metering requirements. Wiring diagrams and other meter information may be obtained from the IFP Metering Department. All meters installed by IFP are owned by IFP and all maintenance of the meters shall be completed by IFP.

A. Location of and Restricted Meters

1. Protection from ice, snow, rain, or other damage shall be provided by the Customer for metering equipment, when location so demands. A meter shall not be located where it will be subjected to shock, vibration, or other damage. The Customer shall be responsible for the cost of repair for damage to the metering equipment due to lack of protection.

2. Meters shall be installed on the exterior of the structure and at a location which will be readily accessible at all times for reading, inspecting and testing. The meter shall not be contained inside a cabinet or utility closet. IFP does not recognize EUSERC standards.

3. Residential meters shall be front yard accessible unless prior approval for another location from IFP is obtained.

4. Meters shall be installed only in sockets which are plumb in all directions and securely fastened to the structure.

5. The centerline of the meter should be five foot, six inches (5'6") above the finished grade or walkway. If structural details prevent this, the center line height shall be not less than four feet (4') or more than six feet (6') in height. See Attached Figures of this Policy.

6. In multiple meter installations such as apartment buildings or shopping centers, meters may be mounted in horizontal rows. The maximum allowable height from ground or walkway to the center line of the meter shall be six foot, six inches (6'6"). The minimum allowable height shall be two feet (2').

a) Contractor / Customer must verify the rough-in placement and check the height of the meter base with Idaho Falls Power Meter Department personnel.

7. In apartment or multiple-use buildings, meters shall not be installed above the first-story level or in the basement.

8. Sufficient access and working space shall be provided around all metering equipment to permit ready and safe operation, maintenance, and testing of such equipment, with a minimum of three feet (3') front working space, minimum of 6 feet, 6 inches (6'6") head room and a minimum of three feet (3') wide plus permitting 180° degree opening of equipment doors or hinged panels.

9. Meters shall NOT be mounted on IFP owned poles or pad mount transformers.

10. If a service has been disconnected for any reason, IFP reserves the right to require an inspection prior to energizing.

11. IFP will no longer allow 120V two wire services. New or upgraded services must be 120/240 three wire or larger.

B. Meter/Point of Service Disconnect

1. External main disconnect(s) shall be required on all new Residential points of service and meter base replacements. External main disconnect(s) shall be located after the meter.

a) Provides point of disconnect for Customer side work, up to and including the main panel.

b) Provides an accessible fire department point of disconnect in the event of a structure fire.

c) Provides an accessible location of IFP to drop the load when working on the meter.

d) External main disconnect will not be required if there is a dedicated transformer for the load and if the transformer has a disconnect switch inside of it.

2. IFP strongly recommends an external main disconnect on Commercial points of service.

C. Determining Self-Contained or CT Metering

1. If a Customer is CT metered, the metering shall be only for one (1) building under residential or commercial rate.

2. The City will require CT meters for all 120/240V single-phase services greater than four hundred (400) amps and all three-phase services greater than two hundred (200) amps. Max amperage allowed for 120/208V single-phase is two hundred (200) amps.

3. When installing a CT cabinet, the hinge side of the cabinet will be opposite the meter installation to prevent damage to the meter by the cabinet door.

D. Residential Metering Requirements

1. All 120/240V single-phase Customers with a main switch ampacity between two hundred one (201) and four hundred (400) amperes will be metered with a self-contained, three hundred twenty (320) amp meter base. See Section V. F. of this Policy for meter base requirements.

E. Commercial Metering Requirements

1. All meters, voltage, and current leads, used with instrument transformers, shall be furnished and installed by IFP meter department personnel. CTs shall be furnished by IFP. Installation of CTs shall be coordinated with IFP meter department personnel.

2. If a splice cabinet or CT cabinet is used, the customer is required to provide all mechanical lugs for that cabinet if the cabinet supplies power exclusively to that customer. The customer must also provide mechanical lugs for use inside the transformer for wiring sized 500 mcm or larger. IFP will provide lugs for use inside the transformer for IFP-owned conductors.

3. All three-phase Customers with a main switch ampacity up to and including two hundred (200) amperes will be metered with a self-contained meter. All loads in excess of two hundred (200) amperes will be CT metered.

4. All meters or instrument transformers must be ahead of the Customer's disconnecting switch. Where multiple meter installations are required and a main switch is used, meters may be installed behind the main switch and ahead of the Customer's disconnect. No unmetered circuits will be connected to the main switch. Entrance wiring must be so arranged that metered circuits do not enter conduits, raceways or enclosures containing unmetered circuits.

5. CT installations shall not be more than fifty feet (50') from the meter base. Contractor shall install minimum one inch (1”) conduit for metering conductors only. Underground metering conduit shall be buried twenty-four inches (24”) in depth. Schedule 40 PVC with RGS above ground into meter base. CTs must be contained within a CT can or approved switchgear. A CT shall not be placed in transformers. If

no building wall is available for mounting, see Free Standing CT Meter in Attached Figures of this Policy.

6. Enclosures for CTs shall be furnished and installed by the Customer (unless otherwise noted). Line and load connections shall be clearly labeled along with labeling all phases. All enclosures shall be at least eleven inches (11") deep and of such size as to permit ready installation of current transformers on the size of conductor used. The table of enclosures for CTs, will be used as a guide for the minimum nominal size of metal cabinet to be used. Ct cabinets shall have a #10 or larger conductor to bond the meter base to the CT cabinet. All enclosures and meter bases shall have provisions for installing security seals and shall be installed at an accessible location on outside of building. IFP will not allow any Customer equipment to be installed on, or holes drilled in the transformer. Enclosures for CTs will be used on both underground and overhead instrument metered installations. The top of CT enclosure shall not exceed six feet (6') above finished grade. The bottom of CT enclosure shall not be less than two feet (2') above finished grade. Any variances to these requirements shall be determined by IFP.

a) For services greater than 801 amps, the CT metering will be installed in an IFP approved pad mounted CT cabinet located adjacent to the transformer (Contractor may use wall mounted CT enclosure for service ampacities of greater than 801 amps if the CT enclosure is rated for and meets minimum UL ratings). Contractor to provide CT cabinet (See Attached Figure 16 of this Policy). CT cabinet to be split bus per American Midwest Power Service Connection Cabinet or approved equal. Coordinate with IFP for required footprint and termination detail. Ground sleeve and ground rod shall be provided by Contractor and installed in conformance with Attached Figures of this Policy. The ground sleeve location shall be compacted to a minimum of ninety-five percent (95%) of maximum density prior to placement. The top of the CT ground sleeve shall be installed a minimum of six inches (6") above final grade. A concrete pad can be utilized instead of a ground sleeve but must have an 18"-24" deep basement for the conduits. Concrete pad must meet CT cabinet manufacturer standards for strength of the fully loaded CT cabinet and be a minimum of six inches (6") above finished grade. A minimum three-foot (3') clear area is required in front of the CT cabinet and a minimum of two-foot (2') clearance is required on the other three (3) sides of the CT cabinet. The CT cabinet location will be determined by IFP. Conductor will be provided and installed by IFP from Transformer to padmounted CT Cabinet on services greater than 801 amps. 4" conduit from Transformer to CT cabinet can have 24" radius elbows. CT Cabinet will be owned and maintained by Developer / Owner. CT Cabinet to be secured by an IFP-owned padlock.

(1) CT Cabinet must meet minimum specifications given from American Midwest Power drawing "Service Connection Cabinet 'SCC' with CT provision" as follows or approved equal:

(a) Cabinet is free standing NEMA 3R. Frame is 12 gauge steel galvanized steel bolted together and include leveling provisions. All side plates are pan formed galvanized steel and are bolted to the frame with

tamper-resistant zinc plated bolts. Enclosure is primed and painted transformer green enamel.
(b) Supporting structure for bus bars is bolted to framework such as that any phase bar can be relocated vertically as required to meet job requirements.
(c) Bus Bars are electrical grade plated aluminum #6101T65 per ASTM specifications # B317 supported on 17" centers using double plastic insulators Copper bus available on special order. Current density is 750A/square inch maximum for Aluminum bus and 1000A/square inch maximum for Copper bus. Each bus bar is punched with 16 sets of 9/16" square holes on 2" horizontally and 1 ¾" centers vertically.
(d) Ratings are 2000A, 2500A, 3000A, 3600A, and 4000A at 600V maximum 3Ø-4W, 3Ø-3W, 1Ø-3W. All cabinets shall have bus braced for 85,000A RMS amperes short circuit current rating.
(e) Connectors in a range of #2 to 750 MCM are available in set screw type or compression type for field or factory installation. Connectors will be factory installed on right side of bus unless otherwise specified. Up to (12) – 750 MCM or (24) – 250MCM conductors can be installed on each side, per bar.
(f) Meets Standards – ETL listed and labeled conforms to U.L. standard 1773 termination boxes. Conforms to NEMA standards. Meets National Electrical Code requirements. Meets Power Company requirements.

7. CT meter bases located within six feet (6') of the pad mount transformer shall be grounded and bonded to transformer to prevent touch potential.

ENCLOSURE FOR CURRENT TRANSFORMERS (CTs)

Service Entrance Conductor Ampacity	Minimum CT Cabinet Size (W x H x D)
401 & Above - 1Ø	36" x 48" x 11" (hinged door type) or smaller cabinet as approved by IFP
400 & Below - 3Ø	36" x 48" x 11" (hinged door type)
401 - 800	36" x 48" x 11" (hinged door type)
Over 801	To be coordinated and approved by IFP

F. Meter Bases

These meter base specifications cover all self-contained meter bases and transformer-rated meter bases.

1. The Customer or Contractor shall furnish meter bases and enclosures for all meter installations. All meter bases and enclosures will be installed by the Contractor and incorporated into the Customer's wiring.

2. Meter bases must be listed and installed to meet the National Electric Code and the National Electric Safety Code. Combination socket and disconnecting devices are approved for use, provided the base meets all other specifications and is wired on the line-side of the Customer's disconnecting device. Corrosion inhibitor shall be used on all connections to aluminum conductors.

3. All self-contained commercial service installations shall have factory installed lever or link bypass.

a) IFP will allow exceptions to the bypass requirements for services with minimal and interruptible load. Services for commercial sprinkler systems controls is an example.

4. IFP will not provide new three-phase, three-wire self-contained service without a grounded neutral system.

5. Single-Phase Meter Bases

a) 120/240V Single-phase 320 residential meter base shall have factory installed lever or link bypass. 120/240V Single-phase meter bases over four hundred (400) amperes shall be CT instrument metered using six (6) point socket type meter base with drilled and tapped mounting plate for test switch provisions.

b) All 120/208V self-contained single-phase meter base installations shall be of a five (5) terminal socket-type meter base and installed such that the fifth terminal is in the 9 o’clock position. Two hundred (200) ampere is the maximum on 120/208V single-phase meter.

6. Three-Phase Meter Bases

a) Two hundred (200) ampere and below self-contained meter base installations on three-phase service shall be a seven (7) point terminal socket type meter base.

b) Three-phase meter bases greater than two hundred (200) amperes shall have a CT instrument metered installation using a thirteen (13) terminal socket-type meter base with a drilled and tapped mounting plate for connection of test switch equipment. Installation of Meters

7. Authorized IFP personnel shall install meter on Customer provided meter base after the following steps have been taken:

a) Must pass Inspection by Electrical Inspector.

b) Customer to sign up for service at City of Idaho Falls Utility Billing.

c) Utility Billing will then submit the connect order to IFP.

8. IFP generally installs meters within five (5) working days after confirmation of connect order from Utility Billing.

G. Removal of Meters

1. Only authorized IFP personnel shall be allowed to remove meters from meter bases on the Customer's premises.

H. Meter Identification

1. All commercial buildings and multi-unit dwellings, including duplexes, triplexes, fourplexes, and similar structures, must be permanently labeled before meters are installed and energized, regardless of whether a meter pack is present. Labels shall be raised, embossed or engraved phenolic plastic nameplate style label. Label shall have a minimum size of 3/4” tall x 2” wide x 1/16” thickness. Letter or numbers must be a minimum of 7/16”. Common gas and electric meters must have the same space designation marking i.e., numbers or letters. The building owner is responsible for proper identification of electric meters. The building owner could be held responsible for IFP costs associated with correcting billing errors caused by mixing wiring or mislabeled meters. If two electric services serve one building or space, a warning tag must be located at each meter point indicating such per NEC. Labels, as described above, marked with voltage and phasing information are required if two or more services with different voltages or phasing are supplied to a building.

I. Master Metering

1. IFP’s retail rates are intended for application to individual customers or units of service. Master metering is prohibited. Except as specifically excepted hereinafter. Master metered mobile home parks, multi-occupant residential buildings, commercial buildings and shopping centers connected prior to July 1, 2010, may continue to receive master metered service.

2. Mobile Home Parks built before July 1, 2010, whose space for tenants have been sub-metered by the park Owners, need not be individually metered by IFP. Mobile home park tenants will be charged the same rate for electric service, as though they were directly metered and billed by IFP.

3. Multi-occupant residential buildings, commercial buildings and shopping centers may be master metered if the electric heating, ventilation, air conditioning or water heating systems are centrally located and cannot be controlled by the individual tenants.

4. A Master-Metered Customer may install sub-metering for individual spaces at the Customer’s own expense. Any master metering system must be maintained by the building owner and installed by licensed electricians. Master metered Customers may also utilize a reasonable allocation procedure to determine a tenant’s usage for the purpose of reimbursing the master metered customer. Such a procedure shall constitute an allocation and not a resale. Such terms must comply with City Code 8-5-9. The Customer shall indemnify IFP for any and all liabilities, actions or claims for injury, loss or damage to persons or property arising from the allocation of service by the customer.

5. IFP will not sell or otherwise provide meters or associated equipment required for sub-metering, nor test and maintain customer owned meters.

VI. SECURITY LIGHTING

A. Program Requirements

1. IFP can provide security lighting for private property for a fixed monthly charge.

   a) The Customer will pay a fixed monthly charge for each luminaire. The rates are published in the City Fee Resolution.

2. Security lights can only be affixed to IFP owned poles with the cost of installation paid by the Customer.

3. The City retains ownership of all facilities and equipment.

4. For more information contact IFP Energy Services at (208) 612-8430.

VII. CUSTOMER GENERATION

A. Generation Facility Design and Installation Requirements

1. All new electric generation equipment that a Customer desires to connect to the IFP distribution system shall be approved by IFP prior to connecting the generation equipment to the IFP distribution system.

2. Customer's operating such generation equipment are required to file a Customer Interconnection Agreement Application and adhere to the following conditions:

B. Generation Facility Design Specifications:

1. Facility Description

   a) The Generation Facility shall be designed, constructed, and operated in a manner such that it will interconnect and operate in parallel with IFP's electric supply system, in a safe and efficient manner without disruption, impairment, damage or loss of operational efficiency to IFP's electric supply system.

   b) The operation of the Generation Facility is intended to offset a Customer-Generator's electric energy purchases from Idaho Falls Power.

   c) The Customer-Generator shall be responsible for the design, installation and operation of the generation system and shall obtain and maintain all required permits and approvals.

   d) Any modifications to the system (aside from routine maintenance), including installation of additional generation equipment, replacement panels, or added parts shall only be made following the prior written approval of IFP.

2. Generation Facility Fuel Type and Size Limitations

   a) The Customer's Generation Facility shall have a maximum annual generating capacity of no more than the previous twelve (12) months of electric usage, exception to sizing limits can be made with IFP approval if historic consumption warrants.

b) For new residential construction the Customer's Generation Facility shall not exceed five (5) kilowatts. After the first twelve (12) months of consumption history, the Customer may reapply for additional generation.

c) Commercial facilities will be based upon an Electrical Engineer's calculations not to exceed the estimated annual kilowatt consumption per meter. Facility must be reviewed and approved by IFP for capacity and qualifying specifications.

d) All Generation Facilities are subject to review and inspection at IFP's sole discretion. It is not IFP's intent to compensate a facility that generates more than its annual consumption. In cases of excess generation, IFP may require the Generation Facility arrangements to be renegotiated.

3. Generation Facility Installation Standards and Code Compliance:

a) Customer-Generator shall provide the electrical interconnection on the Customer-Generator side of the meter between the Generation Facility and IFP's system. FP shall make reasonable modifications to their system necessary to accommodate the generation system, with all IFP system modifications being paid for by the Customer. The cost for such modifications will be estimated by IFP, with Customer payment due in advance of installation.

b) The Generation Facility shall include all equipment necessary to meet applicable safety, power quality, and interconnection requirements. These requirements are, or may include,

(1) IFP's policies
(2) National Electrical Code
(3) National Electrical Safety Code
(4) Institute of Electrical and Electronic Engineers (e.g., IEEE 1547),
(5) Nationally Recognized Testing Laboratories (e.g., UL 1741)
(6) California Rule 21
(7) Hawaii Rule 14H
(8) Utility best practices.

c) IFP Engineering staff must approve each design drawing prior to construction of the Generation Facility. The drawings must comport to generally accepted engineering design practices and be submitted with the application. This review will be completed within thirty (30) days of application.

d) Upon completion of construction, the City Electrical Inspector shall give final inspection and approval for the Generation Facility to commence operation.

e) The Customer-Generator shall attend an orientation session with Idaho Falls Power staff. Call (208) 612-8456 for more information.

f) The Customer-Generator shall then file an application for Net-Metering and Small Generation Interconnection Agreement Application with, and receive approval from, IFP before installing an interconnected Generation Facility on Customer-Generator property. Application forms are available at the City of Idaho Falls

Building Department. The completed application and Generation Facility system design drawing should be returned to the address listed on the application. The City of Idaho Falls Building Department will also require a building permit and electrical permit along with an additional copy of the system design for review. Review by the City of Idaho Falls Building Department and IFP will occur simultaneously. IFP may withhold approval, if for any reason the requested interconnection would result in a negative monetary or physical impact on IFP's electrical system.

4. Disconnection Device:

a) Customer-Generator shall furnish and install (on Customer-Generator side of the meter) a disconnecting device capable of fully disconnecting and isolating the facility from IFP's distribution system.

(1) The disconnecting device shall be located adjacent to IFP's bi-directional metering equipment and shall be of the visible break type, located in a metal enclosure that can be secured by an IFP-owned padlock or other security device.
(2) The disconnecting device shall be accessible to IFP's personnel at all times and shall conform to National Electric Code standards.
(3) IFP shall have the right to disconnect, with or without notice, the Generation Facility from IFP's distribution system in order to maintain safe and reliable electrical operating conditions or to protect IFP's system from damage, disruption, interference, or to preserve system reliability.
(4) The Generation Facility shall remain disconnected until such time that IFP determines conditions justifying the disconnection have been resolved.

5. Generation Facility Operational Standards:

a) Customer-Generator shall furnish, install, operate and maintain in good order and repair, without cost to IFP, all equipment required for the safe operation of the Generation Facility operating in parallel with the IFP's electrical supply system. This shall include, but is not limited to, equipment necessary to

(1) Establish and maintain automatic synchronism with IFP's distribution system,
(2) Automatically disconnect the Generation Facility from IFP's distribution system in the event of system overload or outage and
(3) For Solar Facilities with backup battery storage, the system must automatically disconnect from and not back feed onto, IFP's distribution system in the event of a system overload or power disruption.
(4) The Customer-Generator's Generation Facility shall not cause any adverse effects upon the quality or reliability of service provided to IFP's other customers.
(5) IFP reserves the right to require that the Generation Facility modifications to comport with Idaho Falls electrical system change in needs or requirements or to negate any adverse impact the interconnected Facility has on other customers.

(6) The Generation Facility shall not cause any adverse effects upon the quality or reliability of service provided to IFP's other customers.
(7) The Customer-Generator shall operate the Generation Facility in accordance with applicable rules and regulations.

b) On an approximate three-year rotation, the Customer is required to confirm the status of the generation facility. In addition, IFP reserves the right to inspect the facility at any time for non-backfeed protection for utility safety requirements.

(1) IFP reserves the right to disconnect the generation facility, or if required the full service if the customer fails to confirm the status of the generation facility or allow for safety inspections.

6. Generation Facility Maintenance:

a) Except for bi-directional metering equipment owned and maintained by IFP, all equipment on the Customer-Generator's side of the meter, including the required disconnecting switch, shall be provided and maintained in satisfactory operating condition by the Customer-Generator at the Customer's expense and shall remain the property and responsibility of the Customer-Generator. IFP shall bear no liability for Customer-Generator's equipment or for the consequences of its operation.

C. Generation Facility Net-Metering and Power Purchases

1. Measurement of Net Energy:

a) Metering equipment shall be installed by IFP (solely at Customer-Generator's expense) to measure the flow of electrical energy to and from the customer premise.

2. Purchase of Energy:

a) The Customer-Generator agrees to sell, and IFP agrees to issue a credit for, all electrical energy generated at the Generation Facility in excess of the Customer-Generator's on-site load in accordance with the current City fee resolution.

b) WHERE CONSUMPTION EXCEEDS GENERATION:

(1) If electricity supplied by Idaho Falls Power during the billing period exceeds the electricity generated by the Customer-Generator during the billing period, the Customer-Generator:

(a) Shall be billed for the applicable non-energy charges for the billing period under the Customer's appropriate retail rate classification;
(b) Shall be billed for the net electricity supplied by IFP at the Customer's appropriate rate adopted in ordinance for the corresponding period.

c) WHERE GENERATION EXCEEDS CONSUMPTION:

(1) If the electricity generated by the Customer-Generator exceeds the electricity supplied by IFP during the billing period the Customer-Generator:

(a) Shall be billed for the applicable non-energy charges for the billing period under the Customer's appropriate rate classification;
(b) Shall be financially credited for excess energy delivered to Idaho Falls Power during the billing period, at the rate adopted in ordinance for the corresponding period.

3. Renewable Energy Credits

a) The Customer-Generator will release to IFP all renewable-energy credits (RECs), renewable-energy credits (S-RECs) or other renewable attributes as appropriate based on actual on-site electric generation from the Generation Facility. Credits will be released to IFP for the duration of the interconnection to IFP's power system.

VIII. ELECTRIC VEHICLE CHARGING STATION PROGRAM REQUIREMENTS

A. Electric Vehicle Level 2 Charging Station Installation

The following are CUSTOMER requirements for those who choose to participate in an IFP electric vehicle charging station lease:

1. Location

a) The CUSTOMER is responsible for the selection of the charging station location, for both wall mount and pedestal mount charging stations with approval from IFP. Location must be approved by IFP prior to installation. IFP staff is available to assist in selecting suitable locations. To schedule an onsite assessment with an IFP representative, call (208) 612-8430.

2. Installation

a) The CUSTOMER will be responsible to install the pedestal concrete pad base, conduit and wire, or conduit and wire for a wall mount location. See Attached Figures for the specification sheets for the pedestal installation. IFP is solely responsible for the installation of the charging station on the CUSTOMER's premise. If a charging station is to be installed on premises, which is leased, rather than owned, CUSTOMER must receive all necessary consent from the premises owner for the installation of the Charging Station by the Customer and allow access for operation and maintenance by IFP.

b) Customer is responsible for acquiring all applicable permits and inspections for the construction and installation of the Station. In the event that an upgrade in electric service or wiring is required to support the stated load of the Station this will be the sole responsibility of the Customer.

c) The CUSTOMER is responsible for all costs (labor and materials) associated with the installation site preparation: trenching, conduit, cement pedestal base, wire, etc.

3. Maintenance and Repair

a) Standard Maintenance

(1) IFP will perform standard maintenance to the charging station to ensure it is in proper working condition throughout the term of the program. Maintenance includes cleaning the charging station connector, testing the charging voltage level, testing system functionality, and related minor work, as reasonably determined by IFP, to preserve the unimpaired function of the charging station.
(2) Customer will provide IFP access to the charging station and related equipment for maintenance between the hours of 7:00 a.m. and 7:00 p.m. local time on City business days. In the case of an emergency, Customer will allow IFP access, with notice, to the charging station and related equipment outside of normal maintenance times.

b) Equipment Damage

(1) Customer is responsible, at its sole cost and expense, for actions related to the repair and replacement of a negligently damaged charging station to include vandalism.
(2) The Customer agrees that the facilities in which the charging station is located will be kept clean and in good repair.
(3) Customer will maintain structural portions of the premises surrounding the Charging Station, including the pavement, foundation, roof structure, walls, columns, beams, parking areas, and all adjoining common areas, in good condition and repair.
(4) If temporary removal of the Charging Station is required in connection with the repair of the Charging Station or building structure, Customer will provide IFP five (5) business day's prior written notice or a shorter but reasonable period in the event of an emergency.
(5) Customer may interrupt electric service to a Charging Station to ensure safety or when needed to repair or maintain the premises. After completion of the repairs or maintenance, Customer will promptly restore the affected charging station and notify IFP.
(6) IFP will not be responsible for damages caused by operation of the Charging Station, including failure of equipment to operate as intended.
(7) IFP will not be held responsible for any damage to the Customer's property or electrical system due to negligent use of or vandalism to the Charging Station.

c) Continuity of service

(1) IFP will use reasonable diligence to supply constant electricity service to the charging station but does not guarantee the service against an irregularity or interruption.
(2) IFP may interrupt electric service to a Charging Station when necessary to maintain reliability of the electric distribution system, ensure safety, reduce peak demand, or to perform maintenance on the Charging Station or related equipment.

(3) IFP may install and operate additional meter(s), data monitoring equipment, or charge management devices which gather information regarding equipment usage.
(4) Such installation will be adjacent to or near the Charging Station but will not interfere with parking or pedestrian traffic paths on premises.

d) Labeling and signage

(1) Charging Stations will be labeled by IFP.
(2) The Lessee will not remove, mar, deface, obscure, or otherwise tamper with the Charging Station labels.
(3) Customer can install signage provided by IFP or others (as approved by IFP) to identify charging station sponsor and provide information about Charging Station care.

e) Charging Station Locations

(1) Charging Stations will be placed on the customer side of the electric meter.
(2) Power used by the Station will flow through the Customers meter and be billed at their appropriate rate class for the customer type as established in the current adopted rate resolution.
(3) The energy consumed by the Station(s) will not be metered separately or tracked independently of the Customers other electric usage at the location on the appropriate meter.

IX. SMALL WIRELESS FACILITIES

A. Purpose.

1. To provide design standards for Small Wireless Facilities (SWFs) also known as small cell installations. These standards are intended for 4G and 5G equipment installed on Idaho Falls Power (IFP) infrastructure located in the City of Idaho Falls and located in City-owned or City-controlled rights-of-ways and easements, but are also applicable to similar technologies such as wi-fi networks.

2. The City of Idaho Falls (City) encourages the deployment of small cell wireless technology within the City for the benefit it provides the citizens of Idaho Falls including increased connectivity and reliable networks and services.

3. The City desires to add this infrastructure with minimal negative impact to the character and aesthetics of our community.

4. The City has a fiduciary duty to manage the public right-of-way (ROW) for the health, safety, and welfare of the public.

5. These Design Standards are for siting and criteria for the installation of Wireless Facilities, including SWFs permitted by the City to be installed.

B. Definitions.

Applicable Codes. International building, fire, electrical, plumbing, or mechanical codes adopted by a recognized national code organization; and adopted by the City with local amendments.

City. The City of Idaho Falls, Idaho and its officers and employees.

City Park. An area that is zoned or otherwise designated by the City as a public park for the purpose of recreational activity.

Collocate or collocation. The installation, mounting, maintenance, modification, operation, or replacement of SWF in a City-owned or City-controlled public ROW on or adjacent to a pole.

Concealment, decorated or camouflaged. Any SWF or Pole that is covered, blended, painted, wrapped, disguised, camouflaged or otherwise concealed or decorated such the SWF blends into the surrounding environment and is visually unobtrusive as allowed as a condition for City approval. Camouflage may consist of but not limited to; hidden beneath a façade, blended with surrounding area design, painted to match the supporting area, or disguised with artificial tree branches.

Decorative pole. A pole specially designed and placed for aesthetic purposes.

Design District. An area that is zoned, or otherwise designated by the City and for which the City maintains and enforces unique design and aesthetic standards on a uniform and nondiscriminatory basis.

Downtown District. The portion in the City's downtown area that is identified as having historic or aesthetic preservation or enhancement needs by the Zoning Code.

Easement. Includes any public easement or other compatible use created by dedication, or by other means, to the City for public utility purposes or any other purpose.

Highway ROW. ROW adjacent to a state or federal highway.

Historic District. An area that is zoned or otherwise designated as a historic district under City, state or federal code.

Hydroelectric Project. All hydroelectric facilities and lands within the FERC licensed boundaries of Project 2842 the Idaho Falls Project and Project 2952 the Gem State Project.

Local. Within the geographical boundaries of the City.

Location City approved and lawfully permitted location for the SWF.

Macro tower. A guyed or self-supported pole or monopole greater in height than standard streetlight poles or traffic signal masts.

Small Wireless Facility (SWF). As defined by City Zoning Code-

Network Provider or Provider. A wireless service provider or a person that does not provide wireless services and that is not an electric utility but builds or installs on behalf of a wireless service provider. a SWF

License. A written authorization for the use of the public ROW or collocation on a service pole required from the City before a network provider may perform an action or initiate, continue, or complete a project over which the City has police power.

Pole. A service pole, municipally owned utility pole, or SWF Support Pole. Poles that have conductor energized at 44kV or higher are excluded from this definition.

Private easement. An easement or other real property right that is only for the benefit of the grantor and grantee and their successors and assigns.

Public Right-of-Way or Rights of Way (ROW). The area on, below, or above a public roadway, highway, street, public sidewalk, alley, waterway, or utility easement in which the City has an ownership interest or controls through contractual means. The term does not include a private easement or the airwaves above a public ROW, with regard to wireless telecommunications.

Service pole. A pole, other than a municipally owned utility pole, owned or operated by the City and located in a public ROW, including: a pole that supports traffic control functions, a structure for signage, a pole that supports lighting (other than a decorative pole); and a pole or similar structure owned or operated by the City and supporting only SWF

Traffic Signal. Any device, whether manually, electrically, or mechanically operated by which traffic is alternately directed to stop and proceed.

Wireless service. Any service, using licensed or unlicensed wireless spectrum, including the use of Wi-Fi, whether at a fixed location or mobile, provided to the public using a SWF

Wireless service provider. A person or company that provides wireless service to the public.

C. Locations of Wireless Facilities and Related Ground Equipment.

1. Most Preferable Locations

   a) Public Right-of-Way

   b) Industrial Areas

   c) Retail and Commercial areas

2. Less Preferable Locations

   a) Historic, Design, and Downtown Districts

      Any area designated by the City as a Historic, Design, or Downtown District will be subject to aesthetic requirements such as Camouflage at the nondiscriminatory discretion of the City.

   b) Municipal Parks

      ROW located in or adjacent to a street or thoroughfare that is adjacent to a municipal park or undeveloped land that is designated for a future park by zoning.

3. Prohibited or Restricted Areas for Certain Wireless facilities, except with Separate City Agreement or Subject or Concealment Conditions.

   a) Residential Areas

ROW that is adjacent to lots or undeveloped land that is designated for residential use by zoning.

If a SWF is installed in a residential area it shall not be placed in public-utility-easement located outside of the platted ROW.

4. Historic, Design, and Downtown Districts.

a) As a condition for approval of SWF in Historic, Design and Downtown Districts, the City shall require reasonable design decoration, Camouflage, or Concealment measures for the SWF. The City requests that a Network Provider explore the feasibility of using concealment, decoration, wrapping, or Camouflage measures to improve the aesthetics of the SWF, or related ground equipment, or any portion of the nodes, poles, or equipment, to minimize visual impacts.

b) Network Provider shall comply with and observe all applicable City, State, and Federal historic preservation laws and requirements.

c) Each license application shall disclose if it is within a District with Decorative Poles or in an area of the City zoned or otherwise designated as a Historic, Design or Downtown District.

5. Historic Landmarks

a) A Network Provider is discouraged from installing a SWF within three hundred feet (300”) of a historic site or structure or Historic Landmark recognized by the City, state or federal government. It is advised that each license application disclose if it is within three hundred feet (300”) of such a structure.

6. Undergrounding Requirements

a) A Network Provider shall comply with nondiscriminatory undergrounding requirements, including City ordinances, zoning regulations, state law, private deed restrictions, and other public or private restrictions, that prohibit installing aboveground structures in a ROW without first obtaining zoning or land use approval.

b) Areas may be designated from time to time by the City as Underground Requirement Areas in accordance with filed plats and or conversions of overhead to underground areas, as may be allowed by law.

c) Each license application shall disclose if it is within an area that has undergrounding requirements.

7. Exceptions

The City at its sole, indiscriminatory, discretion may grant exception to the above prohibited locations and sizes.

D. Order of Preference for SWF Support Poles and attachments to existing facilities.

1. The preference is for all electronics except the antennae to be located in a ground mounted cabinet located behind existing walkways.

2. Existing non-decorative streetlight poles

3. Traffic signal structures when such installation will not interfere with the integrity of the SWF and will not interfere with the safety of the public.

4. New SWF poles located in non-residential areas at signalized intersections.

5. Ground Equipment should be minimal and the least intrusive alternative.

E. Guidelines on Placement

1. Generally, Network Provider shall construct and maintain SWF and SWF Support Poles in a Manner that does not:

a) Obstruct, impede, or hinder the usual travel or public safety on a public ROW;

b) Obstruct the legal use of a public ROW by other utility providers;

c) Violate nondiscriminatory applicable codes;

d) Violate or conflict with the City's publicly disclosed public ROW management policies or zoning ordinances;

e) Violate the ADA; or.

f) Violate City noise or nuisance standards.

2. Licensing.

a) As defined in City Code, Idaho Falls Service Policy, City Design Criteria, and a Master License Agreement with each Network Provider or carrier.

b) All new equipment placed in the ROW shall require a ROW permit. This permit will ensure review of traffic and pedestrian safety and to review potential impacts from planned construction projects.

3. SWF facilities placement.

a) ROW. SWFs with related ground equipment shall be placed, as much as possible within two feet (2') at the outer edge of the ROW line to minimize any obstruction, impediment to the usual travel or public safety on a ROW.

b) Height above ground: SWF attachments to a pole shall be installed at least eight feet (8') above the ground, and if a SWF attachment is projecting toward the street, the attachment shall be installed no less than sixteen feet (16') above the ground.

c) SWF Spacing: SWFs shall be no closer to another SWF than a minimum of three hundred feet (300'), unless by Conditional Use Permit.

d) Installations on Traffic Signals: Installation on traffic signal structures must:

(1) Be encased in a separate conduit than the traffic light electronics,
(2) Have a separate electric power connection than the structure,
(3) Have a separate access point than the structure, and

(4) Be clear of any current or potential attachment of traffic control devices (signal and signs) and ancillary devices (detection, preemption, surveillance, etc.) and not constitute a violation of the Manual on Uniform Traffic Control Devices (MUTCD).

(5) SWFs will not be allowed on any signpost located in the ROW.

4. New SWF Support Poles.

a) All new poles must be selected from the current Idaho Falls Power list of acceptable poles by Valmont or approved equivalent.

X. JOINT USE ATTACHMENT CONSTRUCTION STANDARDS AND POLICY

A. Purpose.

1. To provide consistent construction standards for joint use attachments on IFP structures.

B. Application Procedures

1. Any communication provider ("Provider") desiring to attach to IFP poles must first have an executed Joint Use Agreement with IFP.

2. Prior to any attachment to IFP poles, Providers desiring joint use must turn in an application to IFP. No attachments to any of IFP poles shall occur until IFP has approved a Permit for such attachments.

3. Permits are required for any overlashing. Provider, Provider's affiliates, or other third party as applicable shall pay any necessary make-ready work costs to accommodate such overlashing.

C. Make-Ready Work

1. It is the Provider's responsibility to advise IFP of any required make-ready work.

2. The Provider will be required to pay for all make-ready work. This payment may be required in advance of any IFP work.

D. Pole Attachment Standards

1. All pole attachments shall be made in accordance with the most current version of the following standards, as applicable:

a) National Electric Safety Code ("NESC")

b) National Electrical Code ("NEC')

c) Regulations of the Occupational Safety and Health Administration ("OSHA").

d) Service Policy Figures 18-23.

E. Position and space

1. The top communication position on all IFP poles is reserved for City of Idaho Falls, IFP, and IFF communication equipment, solely as determined by IFP.

2. A position generally consists of twelve inches (12”) of pole space.

3. Providers are permitted no more than one (1) attachment per pole without express written IFP approval.

4. A communication cross arm may be installed when vertical space on the pole is or may be limited, solely as determined by IFP. A communication cross arm is recommended when there are three (3) or more communication lines attached to a pole or as vertical clearance from ground would reasonably require.

F. Clearances

1. Minimum separation between electric service drops and communication service drops shall be twelve inches (12”), per NESC 235C1b (exception 3).

2. Minimum mid-span vertical separation between communication cables shall be six inches (6”).

G. Vertical Risers

Unless otherwise directed by IFP, all risers, including those providing 120/240 volt power for communications equipment enclosure, shall be placed on the quarter faces of the pole and must be installed in sealed conduit on stand-off brackets. A two-inch (2”) clearance in any direction from cable, bolts, clamps, metal supports, and other equipment shall be maintained.

H. Climbing Space

A clear climbing space must be maintained at all times on the face of the pole. All attachments must be placed to allow and maintain a clear and proper climbing space on the face of IFP’s poles. Communication cable/wire attachments shall be placed on the same side of the pole as those of other attaching entities.

I. Anchors and Down Guys

1. No attachment may be installed on an IFP pole until all required guys and anchors are installed. No attachment may be modified, added to, or relocated in such a way as is likely to materially increase the stress or loading on IFP poles until all required guys and anchors are installed. Placing pulling strain on IFP poles prior to supporting the pole is cause to immediately stop work.

2. Providers shall be responsible for procuring and installing all anchors and guy wires to support the additional stress placed on IFP poles joint use facilities attachments. Anchors shall be guyed adequately. Anchors and guy wires shall be installed on each IFP pole where an angle or a dead-end occurs with guy attachments to poles at or below its cable/wire attachment.

3. Providers shall not attach guy wires to the anchors of IFP or any third-party user without the anchor owner's specific prior written consent.

4. Any down guys, if needed, shall be bonded, to the vertical ground wires of IFP's pole where a ground wire is available.

J. Service Drops

1. Aerial service drops shall not be attached directly to the pole. Aerial service drops shall be attached to the messenger a minimum of six inches (6") from the pole.

K. Tagging

1. All communications cables shall be identified with a band-type cable tag or other identification acceptable to IFP at each attachment within twelve inches (12") of the pole. The tag shall be consistent with industry standards, and shall include, at minimum, the following: cable owners name, which can be read by observation from the ground.

L. Pole Removal

1. In the event a pole is abandoned or replaced, the last party attached to a pole shall be responsible for removal, disposal, and liability of such pole.

M. Nonfunctional Attachments

1. Providers shall remove any nonfunctional attachments within one (1) year of the attachment becoming nonfunctional.

XI. APPENDICES

A. Transfer of power service FAQ's

Frequently asked questions regarding transfer of service or the removal of Rocky Mountain Power owned assets.

1. My property has been annexed into the City and I would like to change power service provider to Idaho Falls Power. Who should I contact?

You can initiate the request by calling the Idaho Falls Power Compliance Manager Richard Malloy at 208-612-8428 rmalloy@ifpower.org .

2. Is there a cost to me to transfer the service?

Idaho Falls Power pays for all the infrastructure costs, such as poles, wire, and transformers, up to the meter point. There is a revenue portion that amounts to 167% of the previous year's total bills. This cost is shared 50/50 with the customer and Idaho Falls Power. Idaho Falls Power will amortize the cost over a three - five year period as a location surcharge on the monthly utility bill.

Typically, because Idaho Falls Power rates are significantly less than Rocky Mountain Power, the customer does not see an increase in the cost of their monthly bill. After the customer's location surcharge is paid, the surcharge automatically drops off.

3. Can I voice my opinion on a buyout?

Yes. Before approval the IPUC will hold a public hearing for all public comments

4. How long does it take to transfer service from Rocky Mountain Power to Idaho Falls Power?

It is anticipated to take from three to five months to complete the transfer of service and associated assets.

5. Why does it take so long to transfer service?

There are several steps that need to occur to complete the transfer; agreement between the utilities, an accounting of the cost of the assets, calculation of the revenue cost and Idaho Public Utilities Commission for approval.

6. Can Idaho Falls Power expedite the transfer?

In February 2026, IFP and RMP expedited the transfer by working with local representatives. This should reduce the time from a year to three to five months.

7. I'm a developer and need to have Rocky Mountain Power assets removed from the property. Can I remove them?

No. The asset exchange must be completed before any assets such as poles, transformers, conductor (wire), ect. can be taken out of service or removed.

8. Is there someone I can contact if the transfer length of time is negatively impacting

me or my business?

Yes, you can call the Idaho Public Utilities Commission in Boise at the following address. As a part of the Idaho State government, their primary function is to serve power customer interests in the state of Idaho and as such they are receptive to customer concerns.

By written letter to: Call or email to:

P.O. Box 83720 Boise, ID 83720-0074 Stephen Goodson – Policy Analyst

11331 W. Chinden Blvd. Building 8, Suite 201-A 208-344-0323
Stephen.goodson@puc.idaho.gov Boise, ID 83714

Phone: 208.334.0300 Online form –
https//puc.idaho.gov/Form/ConsumerAssistance

Toll Free: 1-800-432-0369 208-334-0369 or 1-800-432-0369

Fax: 208.334.3762

B. High Density Load Service (Crypto currency Data Mining Centers) FAQ's

Frequently Asked Questions regarding Idaho Falls Power (IFP) and High Density Loads (HDL). The most common HDL loads are crypto mining operations but can also include traditional data centers.

1. What is the cost of energy?

For loads of under 1 mw, IFP has an HDL rate which can be found at: https://www.ifpower.org/accounts-and-services/rates-and-policies

2. What if my load is greater than 1 mw?

For all new loads of greater than 1 mw, the rate will be negotiated and will require City Council approval. Generally, this rate will be based on the market price for power, plus the cost to deliver the energy to your site. For current market power prices, the EIA does have the historical market prices at Mid-c and Palo Verde on their web page at, https://www.eia.gov/electricity/wholesale/.

3. What if my load is greater than 10 mw?

For loads over 10 mw there are significant contractual and transmission issues. If you are interested in pursuing loads above the 10 mw we would anticipate several years of power supply contract negotiations and transmission service studies and very possible additional years for transmission construction.

4. What is the cost to install a service?

IFP price for new and upgraded services is per our Service Policy available on our website. In general IFP will provide a cost to install any required equipment and upgrades to existing equipment and this must be paid prior to scheduling any jobs. Further, if extensive

studies are required, IFP reserves the right require prepayment of estimated labor engineering work.

5. Where are some good sites for an HDL?

IFP does not have the time, resources, or expertise to locate sites for commercial businesses. Before we can provide any significant assistance to a customer seeking to locate an HDL in our service territory, we need a specific location and a desired peak load amount. If an excessive number of locations are desired to be researched, IFP reserves the right require prepayment of estimated labor engineering work.

6. Where can I get service from IFP?

IFP is a division of the City of Idaho Falls and serves only inside the city limits of Idaho Falls. These boundaries can be found at: https://www.idahofallsidaho.gov/332/Maps.

7. What if we wanted to set up individual meters all under 1mw? Would that exempt us from the negotiated rate?

For reviewing the load size IFP will consider all the usage at a specific site or for a specific customer to be one load, irrespective of the number of meters. This includes multiple corporations under one parent or common ownership.

8. What if I start with a load under 1 mw and want the flexibility to expand in the future?

The customer is responsible for the costs of any needed upgrades to IFP's infrastructure when that upgrade is caused by increased energy usage by the customer. Further, a contract and negotiated rate will be required if a customer's loads increase above 1 mw.

9. Will my HDL service be subject to disconnection?

The negotiated agreement will set out the terms and conditions under which IFP and the customer will use HDL's for load management and demand response. Also, while at IFP we pride ourselves on our level of high reliability we do not guarantee uninterrupted service.

Further, if were ever required to reduce loads we would prioritize critical loads such as medical facilities and first responder facilities.

10. What voltages does IFP provide power at?

IFP can provide power at the secondary voltages of 480/277 or 208/120. Or IFP can provide a power at the primary voltage of 12.5kv and the customer would provide the required transformers. More details on IFP service can be found in our Service Policy at: https://www.ifpower.org/accounts-and-services/rates-and-policies.

Service Policy Figure Index:

1. 3 PHASE TRANSFORMER PAD
2. 3 PHASE TRANSFORMER PAD (SMALL)
3. 3 PHASE TRANSFORMER PAD (LARGE)
4. SINGLE PHASE TRANSFORMER BASE (GROUND SLEEVE)
5. 3 PHASE SECTIONALIZING CABINET BASE (GROUND SLEEVE)
6. SINGLE PHASE SECTIONALIZING CABINET BASE (GROUND SLEEVE)
7. SECONDARY SERVICE PEDESTAL BASE (GROUND SLEEVE)
8. TYPICAL BELL END INSTALLATION DIAGRAM
9. JOINT UTILITY TRENCH
10. LIGHT POLE FOUNDATION DETAIL
11. TYPICAL RESIDENTIAL UNDERGROUND SERVICE
12. TYPICAL RESIDENTIAL OVERHEAD SERVICE
13. ELECTRICAL SERVICE REQUIREMENTS
14. FREE STANDING METER PANEL (POST MOUNTED – 1Ø)
15. FREE STANDING CT METER (POST MOUNTED – 1Ø OR 3Ø)
16. CT CABINET WITH GROUND SLEEVE (801 – 4000 AMPS)
17. RISER DETAIL
18. OVERHEAD CLEARANCES
19. OPERATION AND CUSTOMER CLEARANCES
20. APPLICATION GUIDE FOR 2017 NESC TABLE 232-1
21. APPLICATION GUIDE FOR 2017 NESC
22. GROUND CLEARANCES 2017 NESC
23. COMMUNICATION CABLE CLEARANCES
24. BOLLARD DETAIL
25. ELECTRIC VEHICLE PEDESTAL FOUNDATION PAD
26. COMMERCIAL LIGHTING CONTROL PANEL & FOUNDATION
27. COMMERCIAL LIGHTING AND DIAGRAM
28. WIRELESS ANTENNA STEEL STREET LIGHT (PADMOUNTED EQUIPMENT)
29. WIRELESS ANTENNA (STEEL MONO POLE)
30. 7’ X 12’ VAULT
31. 7’ X 12’ VAULT LID
32. FIBER / POWER SECONDARY TRENCH
33. FIBER / WALL MOUNT EXAMPLES
34. RESIDENTIAL SECONDARY SERVICE OWNERSHIP
35. FIBER GROUND SLEEVE DIMENSIONS

3 PHASE TRANSFORMER PAD

PLAN VIEW

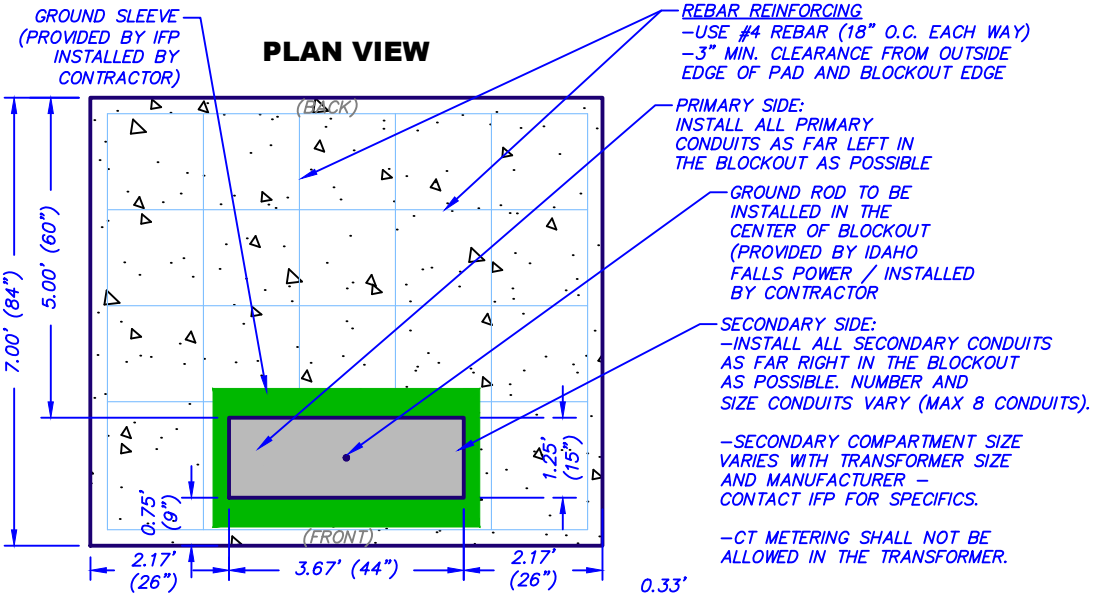

LAYOUT VIEW

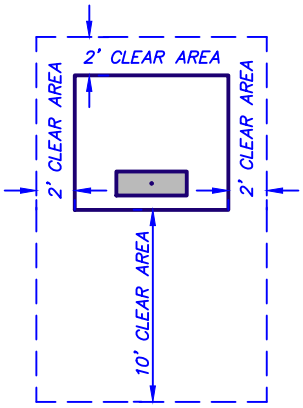

PROFILE VIEW

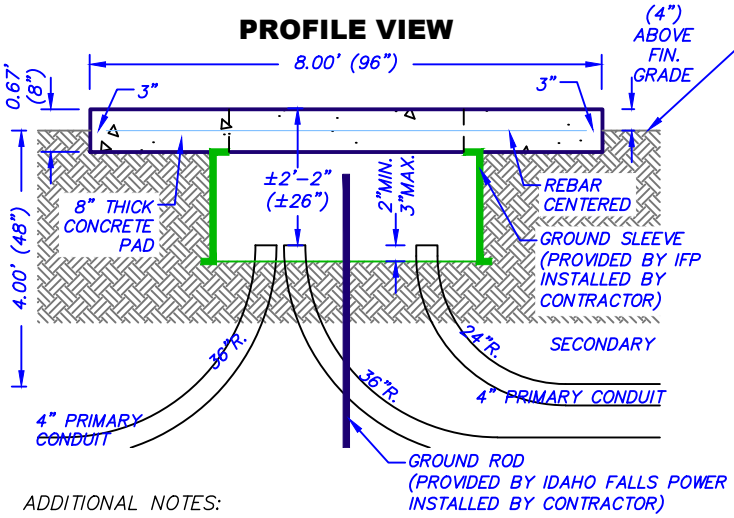

SIDE VIEW

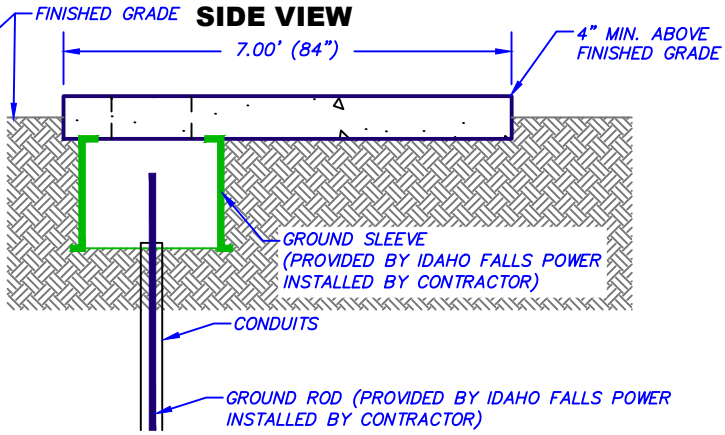

ISOMETRIC VIEW OF GROUND SLEEVE

ACTUAL GROUND SLEEVE MEASUREMENTS MAY VARY – COORDINATE WITH IDAHO FALLS POWER

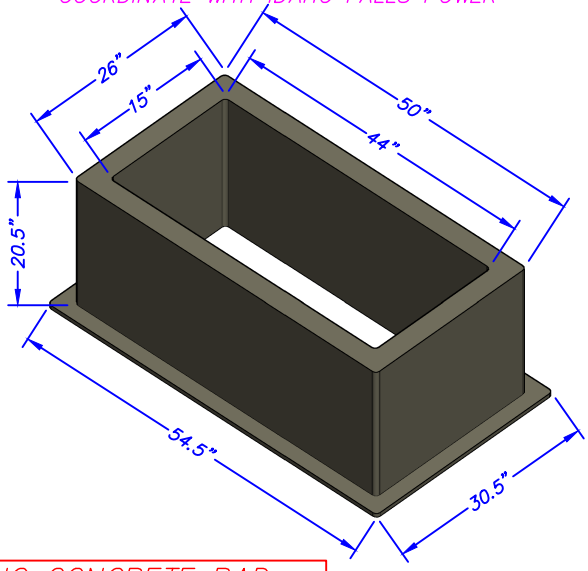

ADDITIONAL NOTES:

1. 8" PRE–CAST CONCRETE PAD IS AN ACCEPTABLE OPTION. SEE EARTHWORK AND OTHER SPECIFICATIONS REQUIREMENTS BELOW AND IN DRAWING. INSPECTION PRIOR TO PLACEMENT IS REQUIRED.
2. INSTALL CONDUITS AS SHOWN IN DETAIL. INSTALL BELL ENDS AND CAP ALL CONDUITS. IDENTIFY ALL CONDUITS FOR ROUTING. CONTRACTOR TO PLACE IFP PROVIDED GROUND SLEEVE AND GROUND ROD AS SHOWN IN DETAIL. CONTACT IFP FOR INSPECTION.
3. TRANSFORMER PAD SHALL HAVE A MINIMUM THICKNESS OF 8" CONCRETE AND SHALL BE DESIGNED WITH SUFFICIENT REINFORCING TO ACCOMMODATE A TRANSFORMER WEIGHT OF 16,000 LBS (SEE DRAWING).
4. THE PAD LOCATION SHALL BE COMPACTED TO A MINIMUM OF 95% OF MAXIMUM DENSITY PRIOR TO PLACEMENT OF CONCRETE.
5. CONTRACTOR TO ENSURE CONSISTENT BACKFILL COMPACTION & BASE (GROUND SLEEVE) MAINTAINS SHAPE & INTEGRITY.
6. THE TRANSFORMER WILL NOT BE INSTALLED UNTIL THE CONCRETE HAS CURED A MINIMUM OF (7) DAYS. IF THE TEMPERATURE IS EXPECTED TO DROP BELOW 40°, THERMAL BLANKETS MUST BE USED FOR A MINIMUM PERIOD OF 72 HOURS. DO NOT PLACE PAD ON THE FROZEN EARTH.
7. TOP OF THE TRANSFORMER PAD SHALL BE CONSTRUCTED TO A MINIMUM OF 4" ABOVE FINISHED GRADE. POSITIVE DRAINAGE MUST BE PROVIDED AWAY FROM THE TRANSFORMER PAD. CONTACT IFP FOR INSPECTION PRIOR TO PLACEMENT OF CONCRETE.

IF POURING CONCRETE PAD INSTEAD OF UTILIZING A PRE–CAST PAD, THE CONTRACTOR MUST ENSURE THE FINISHED BLOCK–OUT OPENING MEASURES 15" X 44"

1" = 3'

IDAHO FALLS POWER

SERVICE POLICY
FIGURE 1
DATE MODIFIED: 02/25/2026

3 PHASE TRANSFORMER PAD (SMALL)

PLAN VIEW

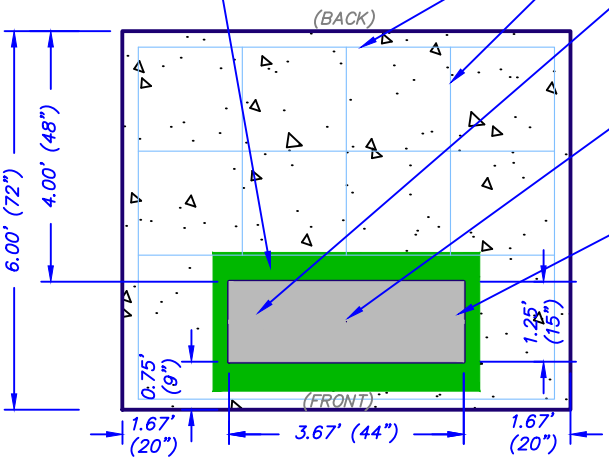

REBAR REINFORCING
–USE #4 REBAR (19 1/2" O.C. EACH WAY)
–3" MIN. CLEARANCE FROM OUTSIDE EDGE OF PAD AND BLOCKOUT EDGE

PRIMARY SIDE:
INSTALL ALL PRIMARY CONDUITS AS FAR LEFT IN THE BLOCKOUT AS POSSIBLE

GROUND ROD TO BE INSTALLED IN THE CENTER OF BLOCKOUT (PROVIDED BY IDAHO FALLS POWER / INSTALLED BY CONTRACTOR

SECONDARY SIDE:
–INSTALL ALL SECONDARY CONDUITS AS FAR RIGHT IN THE BLOCKOUT AS POSSIBLE. NUMBER AND SIZE CONDUITS VARY (MAX 8 CONDUITS).

–SECONDARY COMPARTMENT SIZE VARIES WITH TRANSFORMER SIZE AND MANUFACTURER – CONTACT IFP FOR SPECIFICS.

–CT METERING SHALL NOT BE ALLOWED IN THE TRANSFORMER.

LAYOUT VIEW

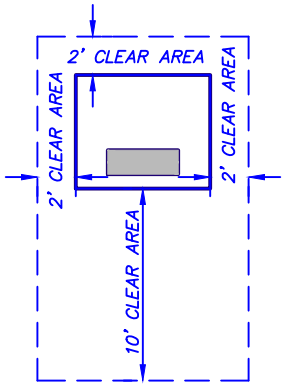

PROFILE VIEW

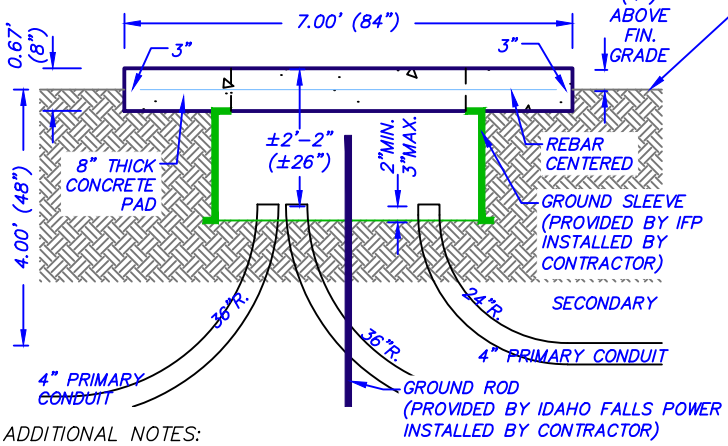

SIDE VIEW

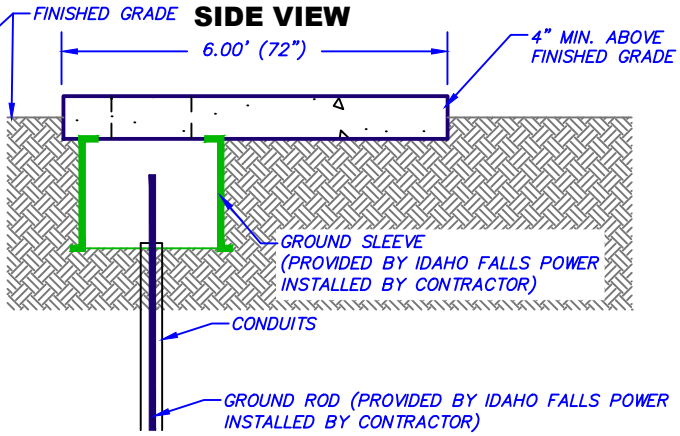

ISOMETRIC VIEW OF GROUND SLEEVE

ACTUAL GROUND SLEEVE MEASUREMENTS MAY VARY – COORDINATE WITH IDAHO FALLS POWER

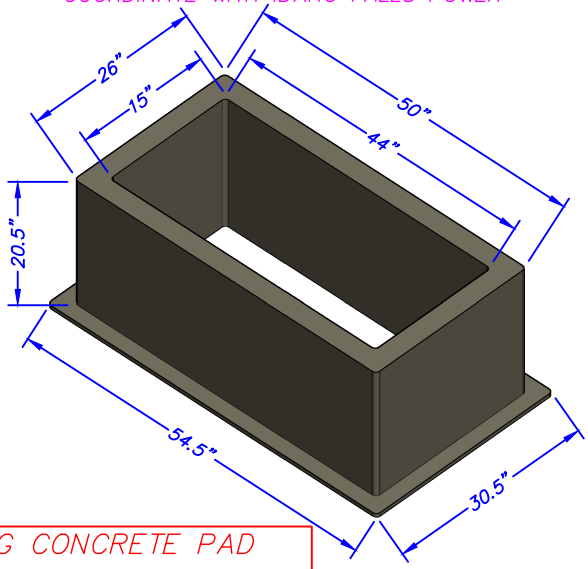

ADDITIONAL NOTES:

1. 8" PRE–CAST CONCRETE PAD IS AN ACCEPTABLE OPTION. SEE EARTHWORK AND OTHER SPECIFICATIONS REQUIREMENTS BELOW AND IN DRAWING. INSPECTION PRIOR TO PLACEMENT IS REQUIRED.
2. INSTALL CONDUITS AS SHOWN IN DETAIL. INSTALL BELL ENDS AND CAP ALL CONDUITS. IDENTIFY ALL CONDUITS FOR ROUTING. CONTRACTOR TO PLACE IFP PROVIDED GROUND SLEEVE AND GROUND ROD AS SHOWN IN DETAIL. CONTACT IFP FOR INSPECTION.
3. TRANSFORMER PAD SHALL HAVE A MINIMUM THICKNESS OF 8" CONCRETE AND SHALL BE DESIGNED WITH SUFFICIENT REINFORCING TO ACCOMMODATE A TRANSFORMER WEIGHT OF 16,000 LBS (SEE DRAWING).
4. THE PAD LOCATION SHALL BE COMPACTED TO A MINIMUM OF 95% OF MAXIMUM DENSITY PRIOR TO PLACEMENT OF CONCRETE.
5. CONTRACTOR TO ENSURE CONSISTENT BACKFILL COMPACTION & BASE (GROUND SLEEVE) MAINTAINS SHAPE & INTEGRITY.
6. THE TRANSFORMER WILL NOT BE INSTALLED UNTIL THE CONCRETE HAS CURED A MINIMUM OF (7) DAYS. IF THE TEMPERATURE IS EXPECTED TO DROP BELOW 40°, THERMAL BLANKETS MUST BE USED FOR A MINIMUM PERIOD OF 72 HOURS. DO NOT PLACE PAD ON THE FROZEN EARTH.
7. TOP OF THE TRANSFORMER PAD SHALL BE CONSTRUCTED TO A MINIMUM OF 4" ABOVE FINISHED GRADE. POSITIVE DRAINAGE MUST BE PROVIDED AWAY FROM THE TRANSFORMER PAD. CONTACT IFP FOR INSPECTION PRIOR TO PLACEMENT OF CONCRETE.

IF POURING CONCRETE PAD INSTEAD OF UTILIZING A PRE–CAST PAD, THE CONTRACTOR MUST ENSURE THE FINISHED BLOCK–OUT OPENING MEASURES 15" X 44"

FOR USE ONLY WHEN DIRECTED BY IDAHO FALLS POWER

IDAHO FALLS POWER

SERVICE POLICY
FIGURE 2
DATE MODIFIED: 02/25/2026

1" = 3'

3 PHASE TRANSFORMER PAD (LARGE)

PLAN VIEW

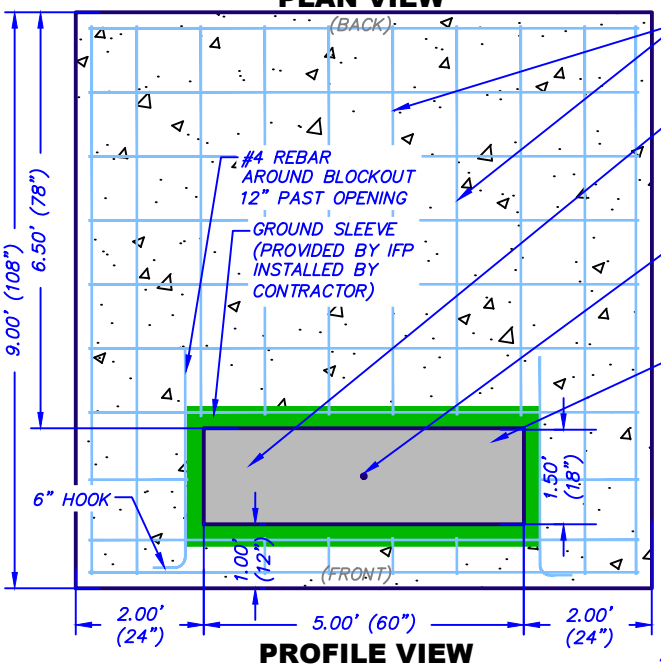

REBAR REINFORCING
–USE #4 REBAR (12" O.C. EACH WAY)
–3" MIN. CLEARANCE FROM OUTSIDE EDGE OF PAD AND BLOCKOUT EDGE

PRIMARY SIDE:
INSTALL ALL PRIMARY CONDUITS AS FAR LEFT IN THE BLOCKOUT AS POSSIBLE

GROUND ROD TO BE INSTALLED IN THE CENTER OF BLOCKOUT (PROVIDED BY IDAHO FALLS POWER / INSTALLED BY CONTRACTOR

SECONDARY SIDE:
–INSTALL ALL SECONDARY CONDUITS AS FAR RIGHT IN THE BLOCKOUT AS POSSIBLE. NUMBER AND SIZE CONDUITS VARY (MAX 8 CONDUITS).

–SECONDARY COMPARTMENT SIZE VARIES WITH TRANSFORMER SIZE AND MANUFACTURER – CONTACT IFP FOR SPECIFICS.

–CT METERING SHALL NOT BE ALLOWED IN THE TRANSFORMER.

LAYOUT VIEW

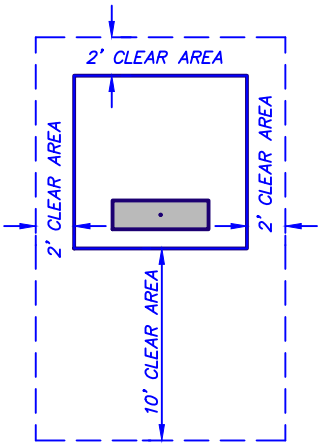

PROFILE VIEW

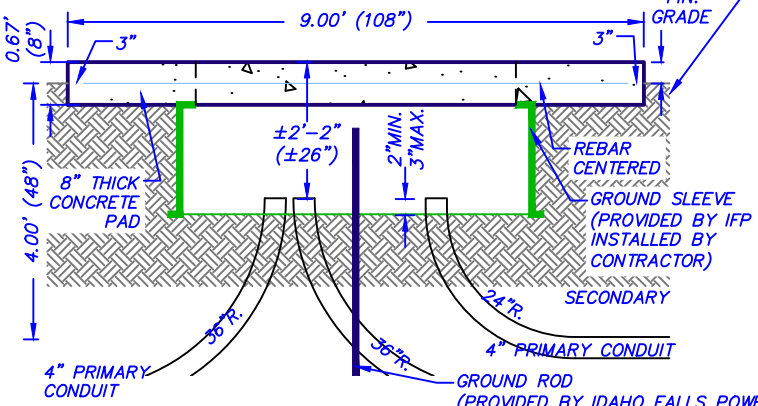

SIDE VIEW

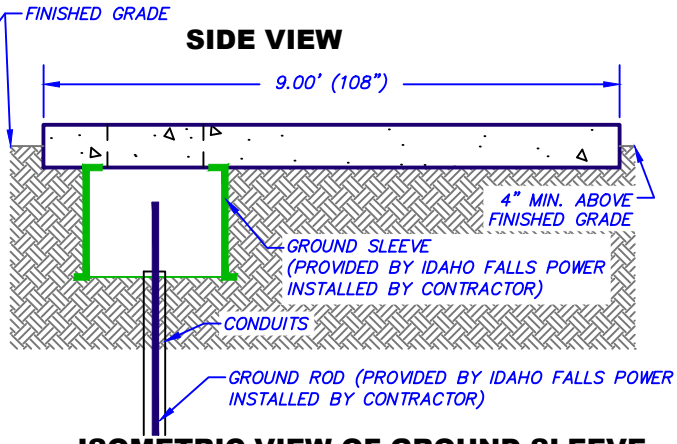

ISOMETRIC VIEW OF GROUND SLEEVE

ACTUAL GROUND SLEEVE MEASUREMENTS MAY VARY – COORDINATE WITH IDAHO FALLS POWER

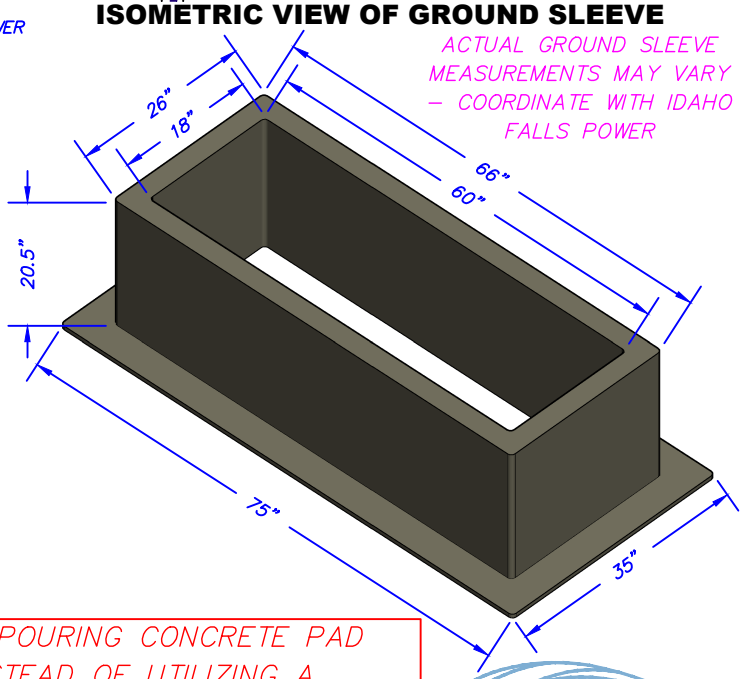

ADDITIONAL NOTES:

1. 8" PRE–CAST CONCRETE PAD IS AN ACCEPTABLE OPTION. SEE EARTHWORK AND OTHER SPECIFICATIONS REQUIREMENTS BELOW AND IN DRAWING. INSPECTION PRIOR TO PLACEMENT IS REQUIRED.
2. INSTALL CONDUITS AS SHOWN IN DETAIL. INSTALL BELL ENDS AND CAP ALL CONDUITS. IDENTIFY ALL CONDUITS FOR ROUTING. CONTRACTOR TO PLACE IFP PROVIDED GROUND SLEEVE AND GROUND ROD AS SHOWN IN DETAIL. CONTACT IFP FOR INSPECTION.
3. TRANSFORMER PAD SHALL HAVE A MINIMUM THICKNESS OF 8" CONCRETE AND SHALL BE DESIGNED WITH SUFFICIENT REINFORCING TO ACCOMMODATE A TRANSFORMER WEIGHT OF 16,000 LBS (SEE DRAWING).
4. THE PAD LOCATION SHALL BE COMPACTED TO A MINIMUM OF 95% OF MAXIMUM DENSITY PRIOR TO PLACEMENT OF CONCRETE.
5. CONTRACTOR TO ENSURE CONSISTENT BACKFILL COMPACTION & BASE (GROUND SLEEVE) MAINTAINS SHAPE & INTEGRITY.
6. THE TRANSFORMER WILL NOT BE INSTALLED UNTIL THE CONCRETE HAS CURED A MINIMUM OF (7) DAYS. IF THE TEMPERATURE IS EXPECTED TO DROP BELOW 40°, THERMAL BLANKETS MUST BE USED FOR A MINIMUM PERIOD OF 72 HOURS. DO NOT PLACE PAD ON THE FROZEN EARTH.
7. TOP OF THE TRANSFORMER PAD SHALL BE CONSTRUCTED TO A MINIMUM OF 4" ABOVE FINISHED GRADE. POSITIVE DRAINAGE MUST BE PROVIDED AWAY FROM THE TRANSFORMER PAD. CONTACT IFP FOR INSPECTION PRIOR TO PLACEMENT OF CONCRETE.

IF POURING CONCRETE PAD INSTEAD OF UTILIZING A PRE–CAST PAD, THE CONTRACTOR MUST ENSURE THE FINISHED BLOCK–OUT OPENING MEASURES 18" X 60"

FOR USE ONLY WHEN DIRECTED BY IDAHO FALLS POWER

1" = 3'

IDAHO FALLS POWER

SERVICE POLICY
FIGURE 3
DATE MODIFIED: 02/25/2026

SINGLE PHASE TRANSFORMER BASE (GROUND SLEEVE)

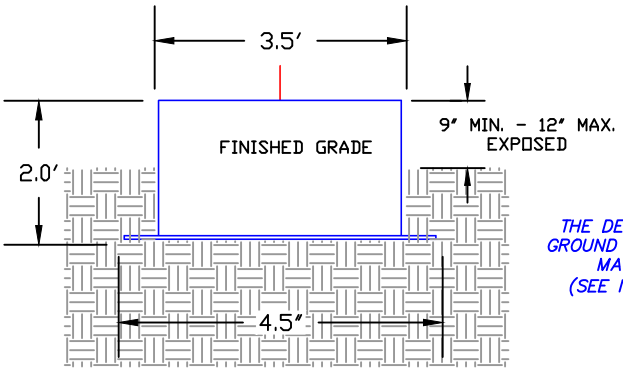

FRONT VIEW

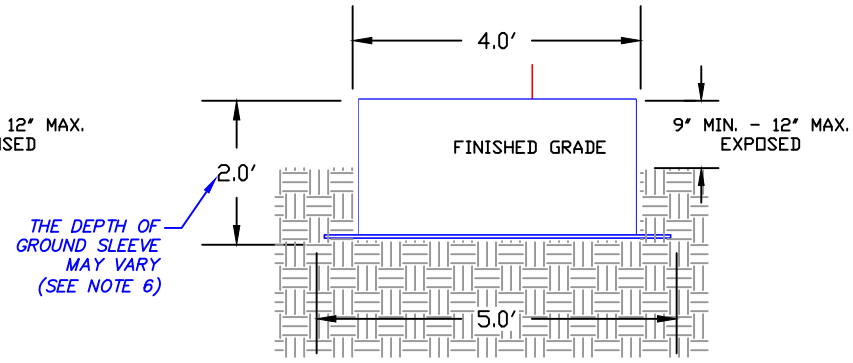

SIDE VIEW

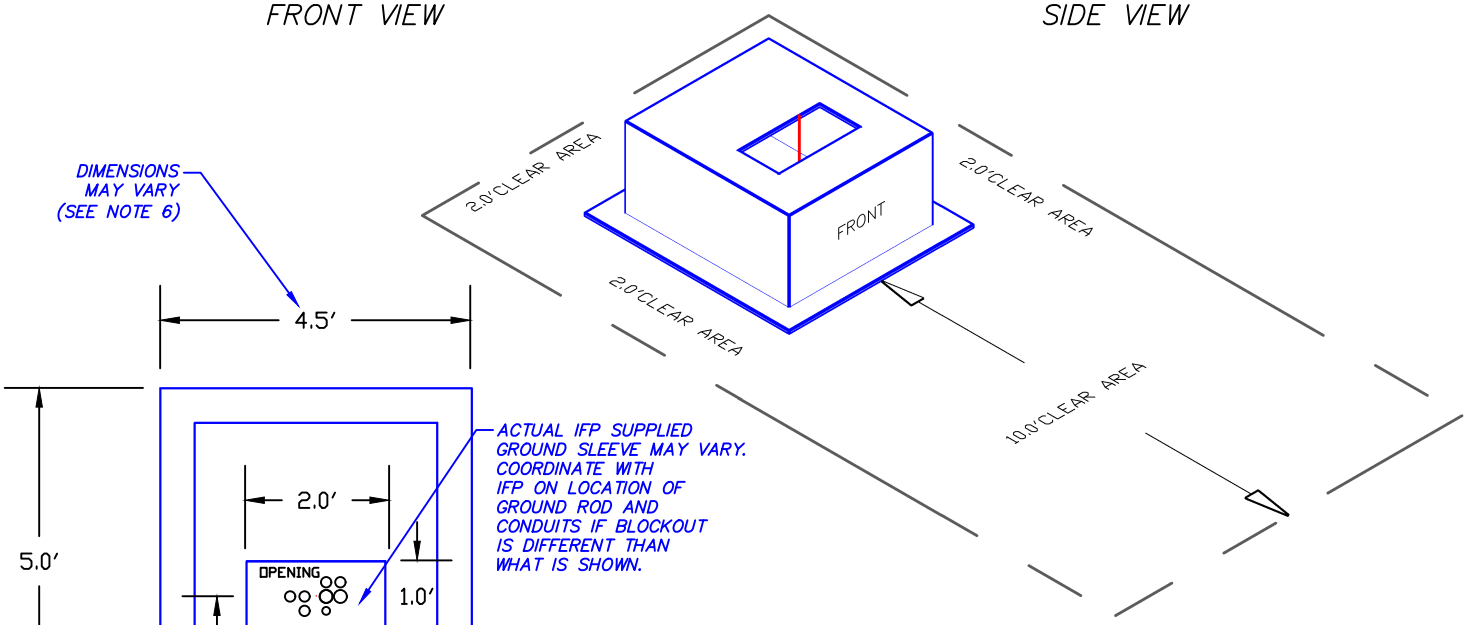

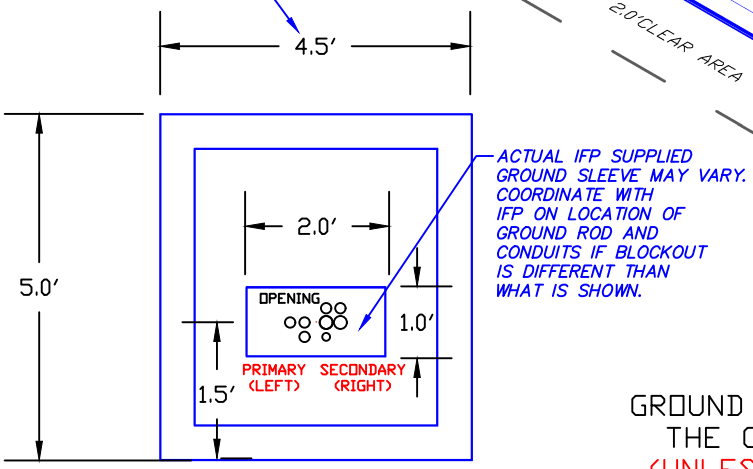

PLAN VIEW

GROUND ROD TO BE INSTALLED IN THE CENTER OF THE OPENING (UNLESS OTHERWISE DIRECTED). (PROVIDED BY IDAHO FALLS POWER INSTALLED BY CONTRACTOR).

1. SINGLE PHASE TRANSFORMER BASE (GROUND SLEEVE) SHALL BE PROVIDED BY IDAHO FALLS POWER BUT SHALL BE INSTALLED TO REQUIRED GRADE BY THE CONTRACTOR/DEVELOPER.
2. THE PAD LOCATION SHALL BE COMPACTED TO A MINIMUM OF 95% OF MAXIMUM DENSITY PRIOR TO PLACEMENT.
3. CONTRACTOR TO ENSURE CONSISTENT BACKFILL COMPACTION & BASE (GROUND SLEEVE) MAINTAINS SHAPE & INTEGRITY.
4. THE TOP OF THE BASE SHALL BE INSTALLED A MINIMUM OF 6" ABOVE FINISHED GRADE. POSITIVE DRAINAGE MUST BE PROVIDED AWAY FROM THE CABINET BASE.
5. ANY DEVIATION IN THE FINAL GRADE OR LOCATION OF THE CABINET BASE MUST BE APPROVED BY IDAHO FALLS POWER.
6. CT METERING WILL NOT BE ALLOWED IN THE TRANSFORMER.
7. ACTUAL DIMENSIONS OF GROUND SLEEVE MAY VARY FROM WHAT IS SHOWN IN DRAWING; VERIFY DIMENSIONS WITH IDAHO FALLS POWER PRIOR TO INSTALLATION.

IDAHO FALLS POWER

SERVICE POLICY
FIGURE 4
DATE MODIFIED: 03/03/2026

3 PHASE SECTIONALIZING CABINET BASE (GROUND SLEEVE)

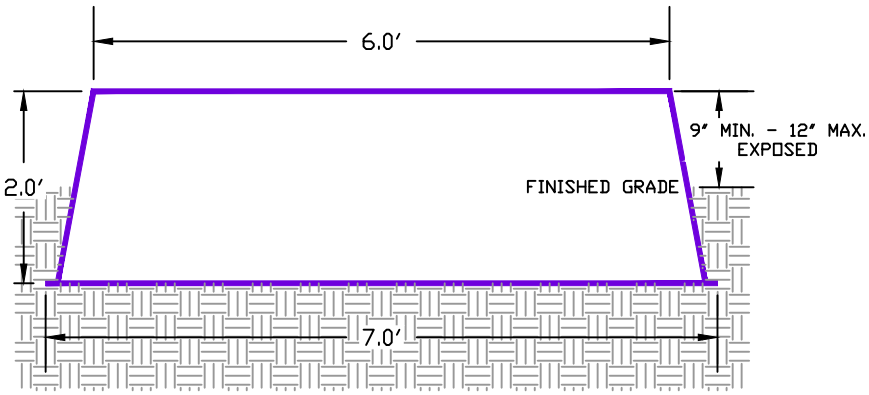

FRONT VIEW

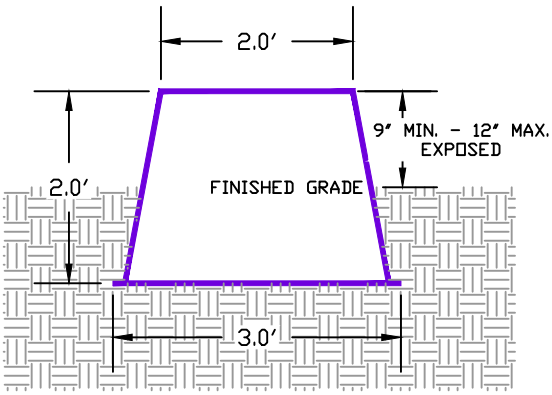

END VIEW

GROUND ROD TO BE INSTALLED IN CENTER OF OPENING.(PROVIDED BY IDAHO FALLS POWER INSTALLED BY CONTRACTOR).

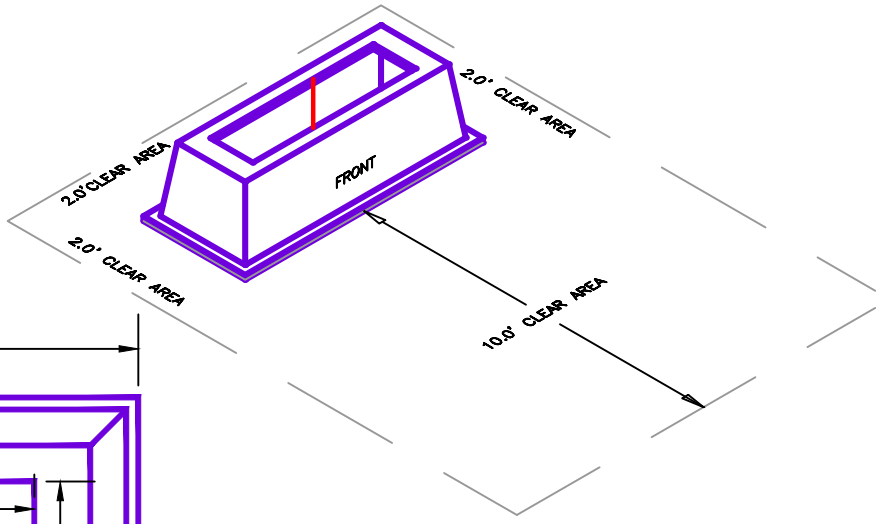

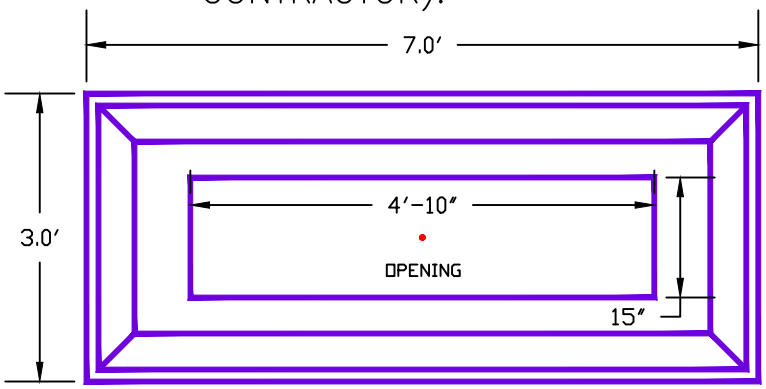

PLAN VIEW

1. 3 PHASE SECTIONLIZING CABINET BASE (GROUND SLEEVE) SHALL BE PROVIDED BY IDAHO FALLS POWER BUT SHALL BE INSTALLED TO REQUIRED GRADE BY THE CONTRACTOR/DEVELOPER.
2. THE PAD LOCATION SHALL BE COMPACTED TO A MINIMUM OF 95% OF MAXIMUM DENSITY PRIOR TO PLACEMENT.
3. CONTRACTOR TO ENSURE CONSISTENT BACKFILL COMPACTION & BASE (GROUND SLEEVE) MAINTAINS SHAPE & INTEGRITY.
4. THE TOP OF THE BASE SHALL BE INSTALLED A MINIMUM OF 6” ABOVE FINISHED GRADE.
5. POSITIVE DRAINAGE MUST BE PROVIDED AWAY FROM THE CABINET BASE.

IDAHO FALLS POWER

SERVICE POLICY
FIGURE 5
DATE MODIFIED: 03/03/2026

SINGLE PHASE SECTIONALIZING CABINET BASE (GROUND SLEEVE)

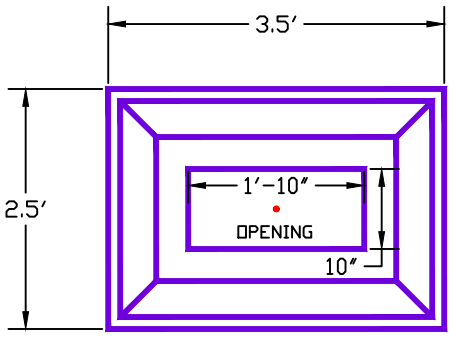

PLAN VIEW

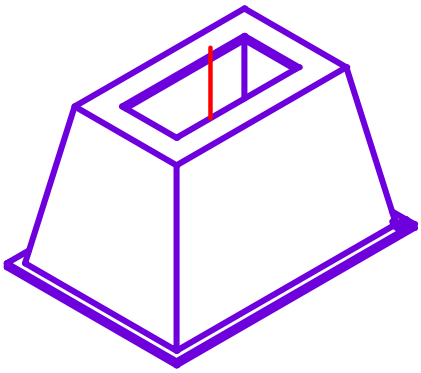

• GROUND ROD TO BE INSTALLED IN CENTER OF OPENING

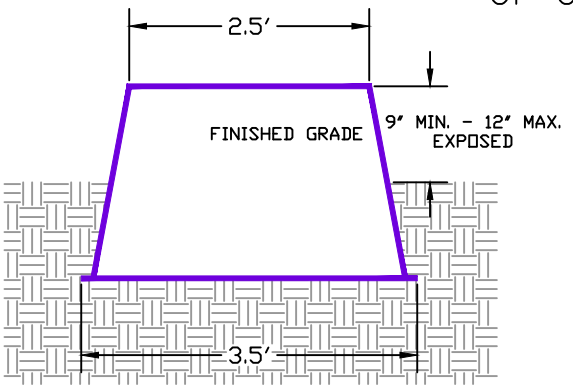

FRONT VIEW

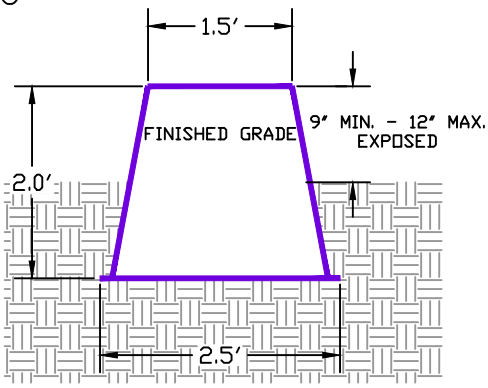

END VIEW

1. SINGLE PHASE SECTIONALIZING CABINET BASE (GROUND SLEEVE) SHALL BE PROVIDED BY IDAHO FALLS POWER BUT SHALL BE INSTALLED TO REQUIRED GRADE BY THE CONTRACTOR/DEVELOPER.
2. THE PAD LOCATION SHALL BE COMPACTED TO A MINIMUM OF 95% OF MAXIMUM DENSITY PRIOR TO PLACEMENT.
3. CONTRACTOR TO ENSURE CONSISTENT BACKFILL COMPACTION & BASE (GROUND SLEEVE) MAINTAINS SHAPE & INTEGRITY
4. THE TOP OF THE BASE SHALL BE INSTALLED A MINIMUM OF 6" ABOVE FINISHED GRADE.
5. POSITIVE DRAINAGE MUST BE PROVIDED AWAY FROM THE CABINET BASE.
6. ANY DEVIATION IN THE FINAL GRADE OR LOCATION OF THE CABINET BASE MUST BE APPROVED BY IDAHO FALLS POWER.

IDAHO FALLS POWER

SERVICE POLICY
FIGURE 6
DATE MODIFIED: 03/03/2026

FIBER & SECONDARY SERVICE PEDESTAL BASE (GROUND SLEEVE)

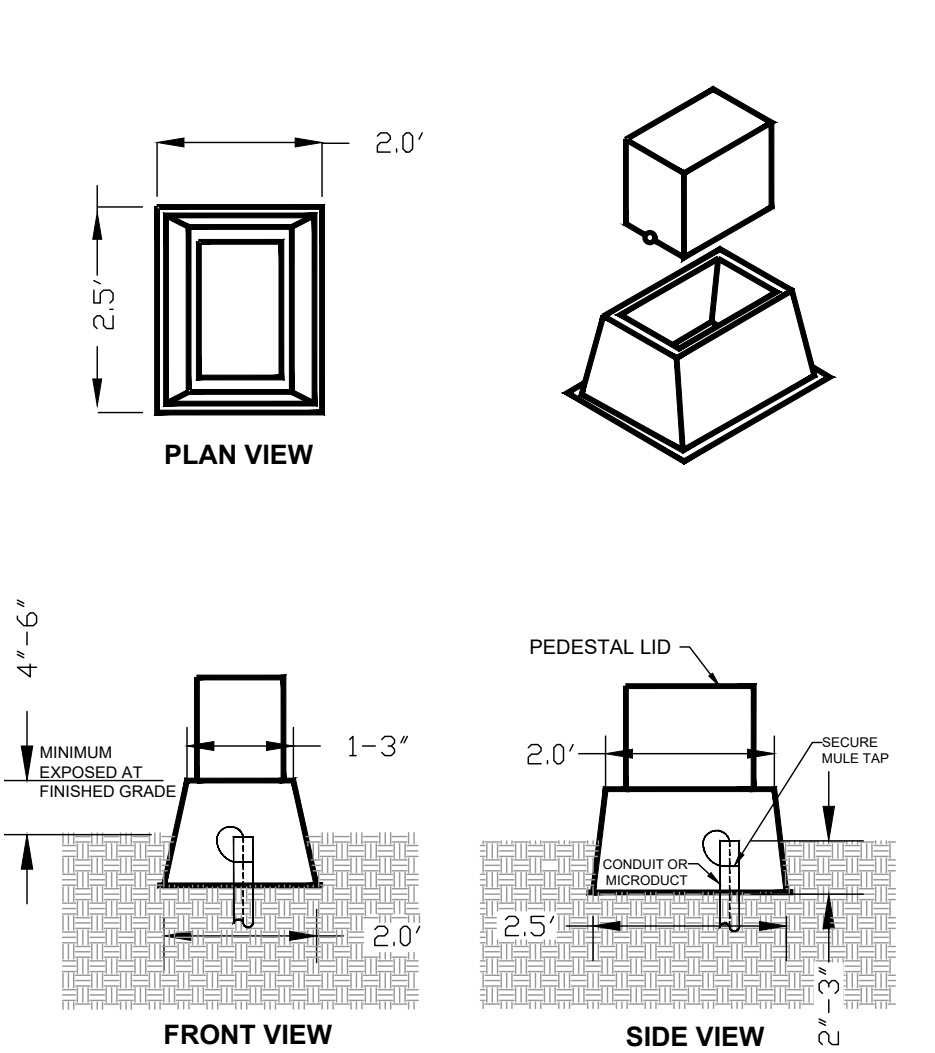

SECONDARY SERVICE PEDESTAL

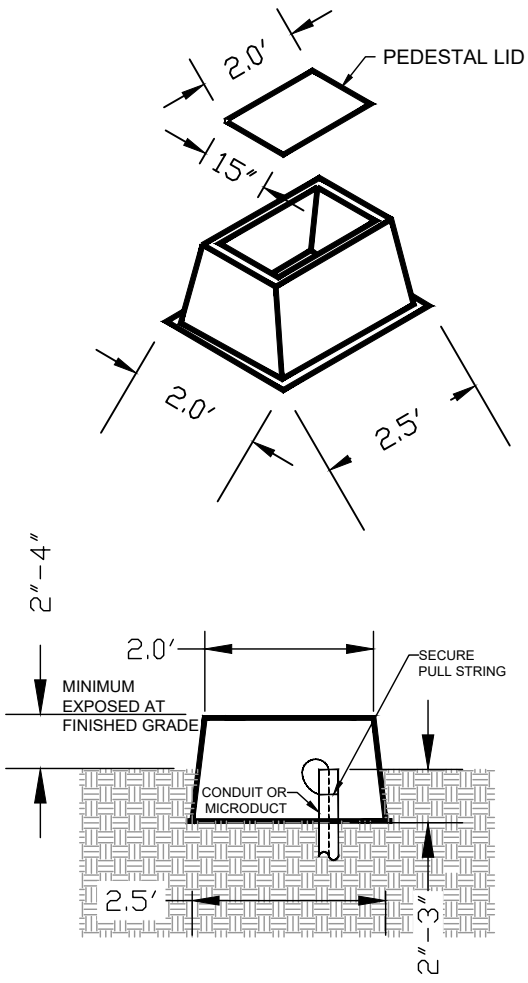

GENERAL FIBER BOX

DIMENSIONS SHOW ARE THOSE OF A

1. FIBER AND SECONDARY SERVICE PEDESTAL. BASE (GROUND SLEEVE) SHALL BE PROVIDED BY IDAHO FALLS POWER, BUT SHALL BE INSTALLED TO REQUIRED GRADE BY THE CONTRACTOR/DEVELOPER.
2. CONTRACTOR TO ENSURE CONSISTENT BACKFILL COMPACTION & BASE (GROUND SLEEVE) MAINTAINS SHAPE & INTEGRITY.
3. THE TOP OF THE SECONDARY BASE SHALL BE INSTALLED A MINIMUM OF 4”–6” ABOVE FINISHED GRADE AND TOP OF THE FIBER BOX SHALL BE INSTALLED A MINIMUM OF 2”–4” ABOVE FINISHED GRADE.
4. GRADES DESCRIBED ABOVE ARE ALSO APPLICABLE TO OTHER FIBER BOXES, SUCH AS HH–1, HH–3, HH–FP, AND HH–EPED. (SEE FIGURE 35 FOR MORE DETAILS.)
5. POSITIVE DRAINAGE MUST BE PROVIDED AWAY FROM THE PEDESTAL BASE.
6. CONTRACTORS SHALL ADD FREE DRAINING AGGREGATE TO THE FLOOR OF THE FIBER BOX GROUND SLEEVE.
7. FINISH GRADE HARDSCAPE IS PROHIBITED WITHIN 6” OF BASE/BOX.

IDAHO FALLS POWER

SERVICE POLICY
FIGURE 7
DATE MODIFIED: 02/25/2026

TYPICAL BELL END INSTALLATION DIAGRAM

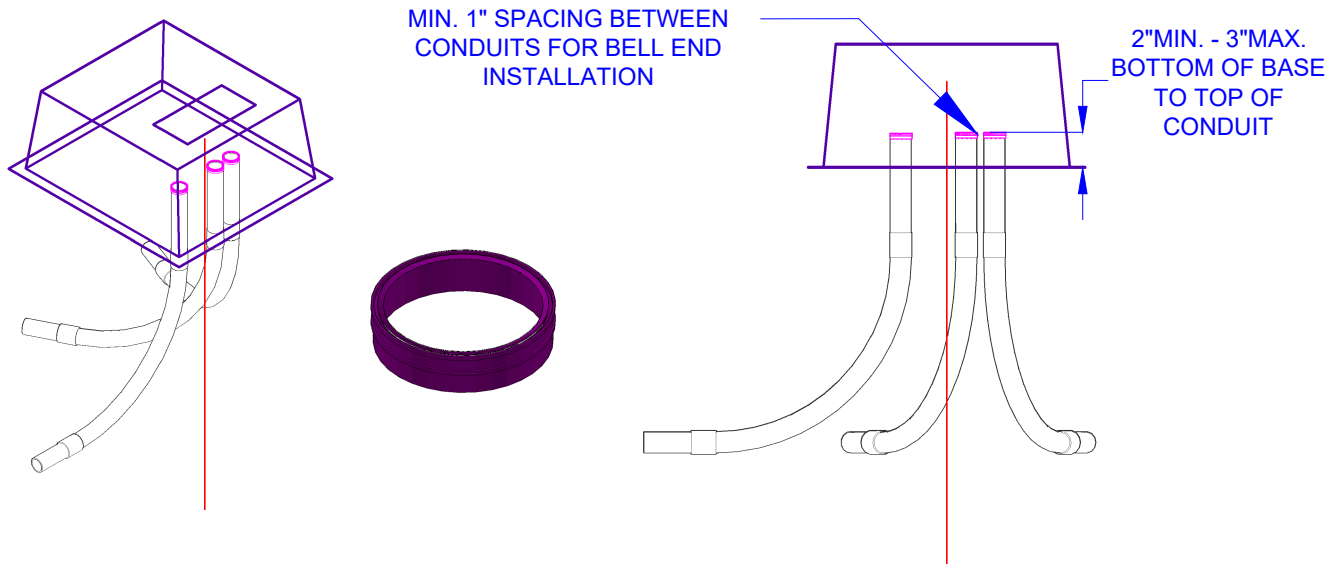

1. ALL CONDUIT (PRIMARY AND SECONDARY) MUST BE CUT TO 2" MIN. TO 3" MAX. FROM BOTTOM OF BASE.
2. BELL ENDS MUST BE SUPPLIED AND INSTALLED BY DEVELOPER/CONTRACTOR.
3. ALL CONDUITS MUST BE CAPPED AND LABELED TO IDENTIFY ROUTING.
4. BELL END INSTALLATION DETAIL TO BE USED FOR ALL ELECTRICAL FACILITIES INCLUDING SECONDARY PEDESTALS, SWITCH CABINETS, TRANSFORMERS, AND LIGHT POLE BASES.
5. TEMPORARY SINGLE PHASE TRANSFORMER PADS SHALL HAVE CONDUIT NO MORE THAN 2" ABOVE PAD.

TEMPORARY SINGLE PHASE TRANSFORMER PADS ONLY

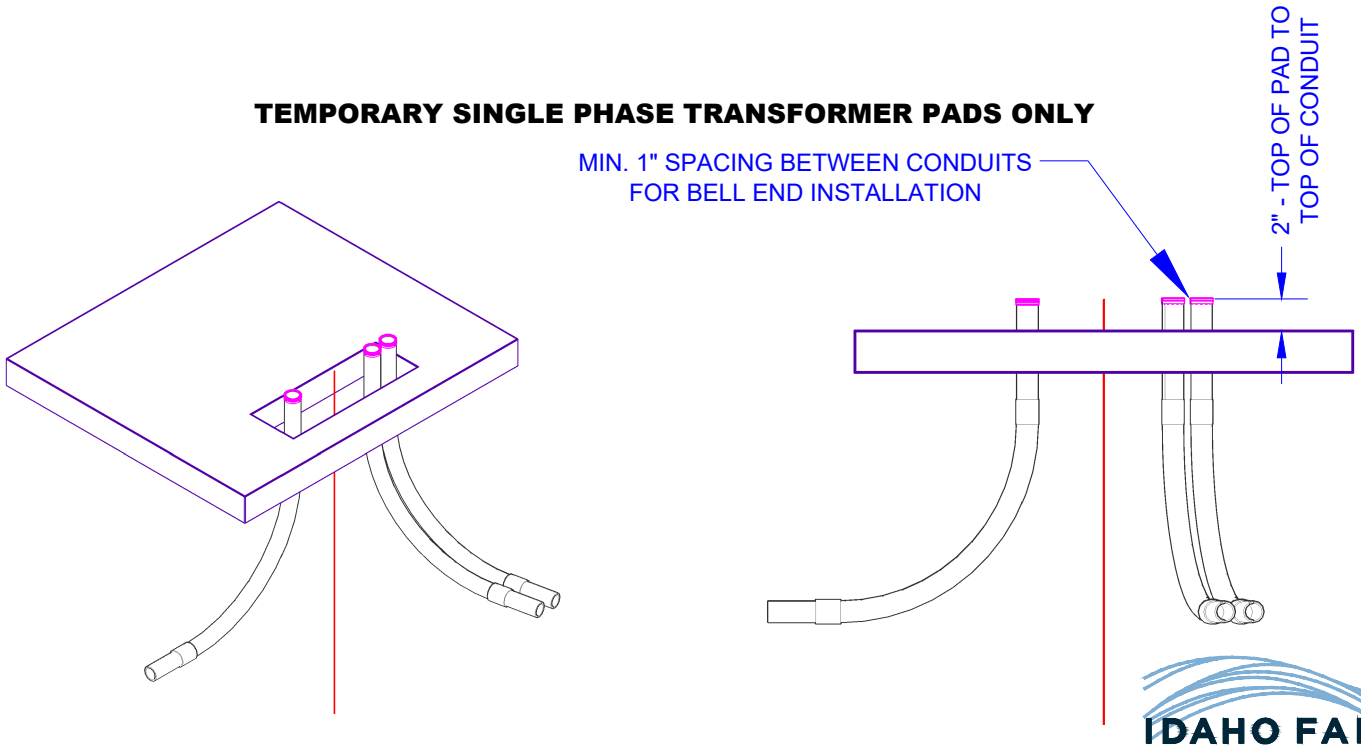

IDAHO FALLS POWER

SERVICE POLICY
FIGURE 8
DATE MODIFIED: 02/25/2026

JOINT UTILITY TRENCH

PLAN VIEW

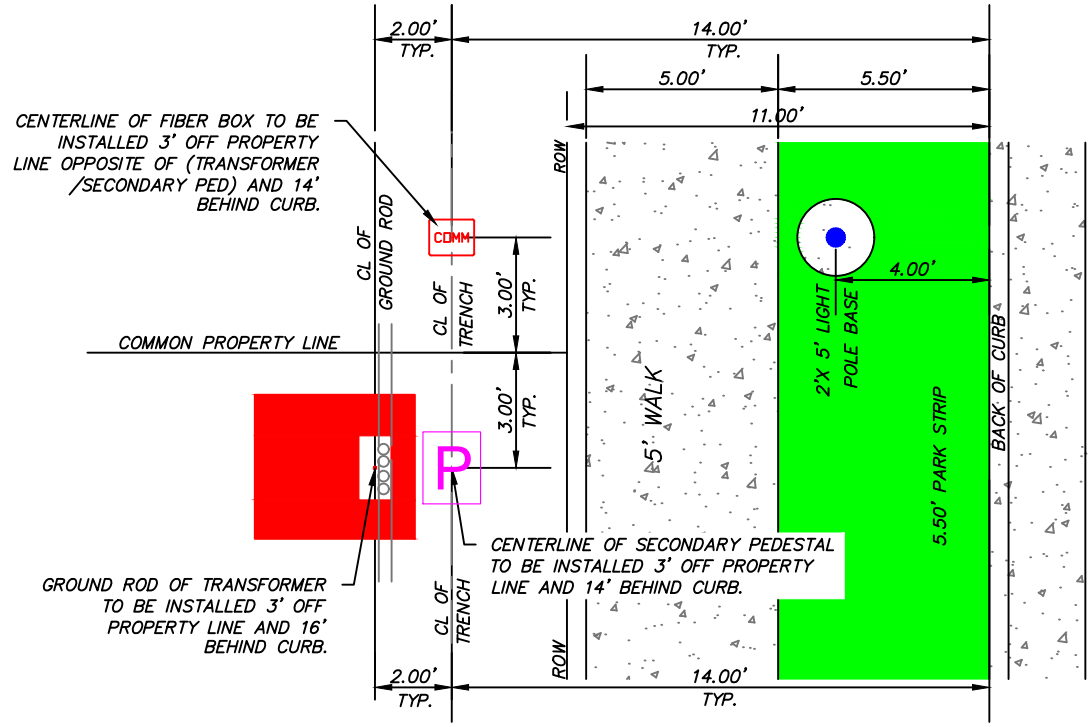

TRENCH PROFILE

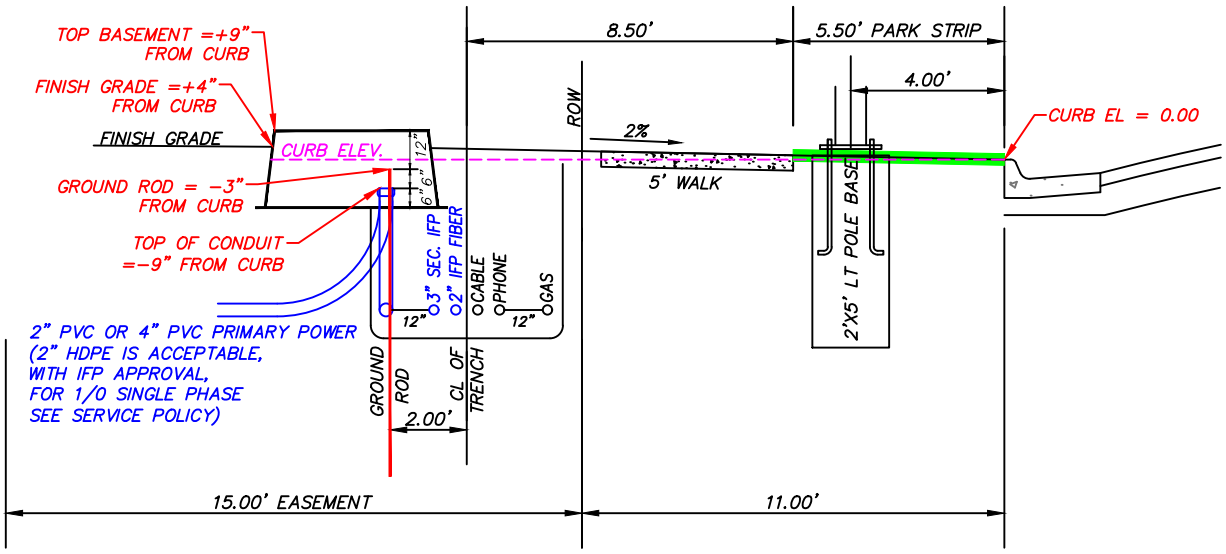

TRENCH DETAIL

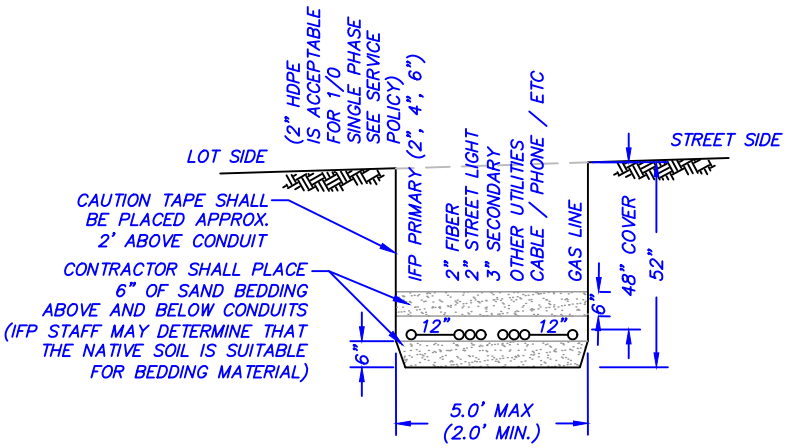

DISTANCES MAY VARY - SEE ELECTRICAL SITE PLANS PRIOR TO CONSTRUCTION

IDAHO FALLS POWER

SERVICE POLICY
FIGURE 9
DATE MODIFIED: 1/14/2020

LIGHT POLE FOUNDATION DETAIL

PLAN VIEW

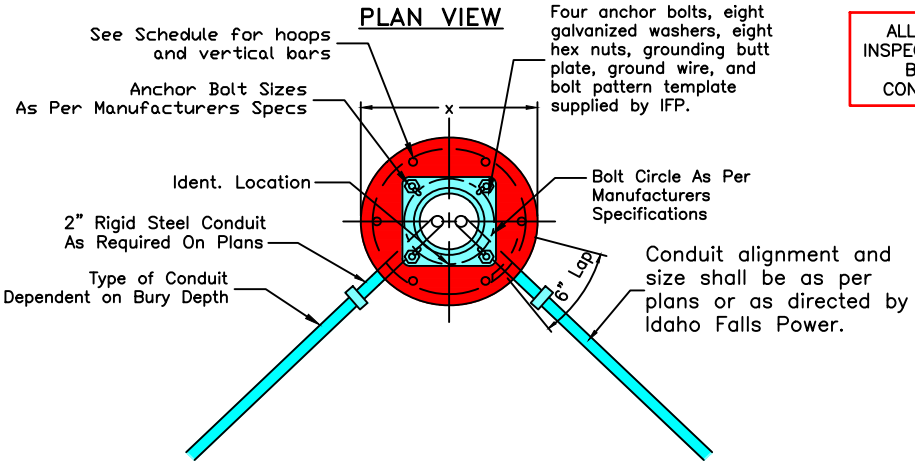

ALL BASES SHALL BE INSPECTED AND APPROVED BY IFP PRIOR TO CONCRETE PLACEMENT

NOT TO SCALE

40' LIGHT POLE BASE PATTERN (TYPE C)

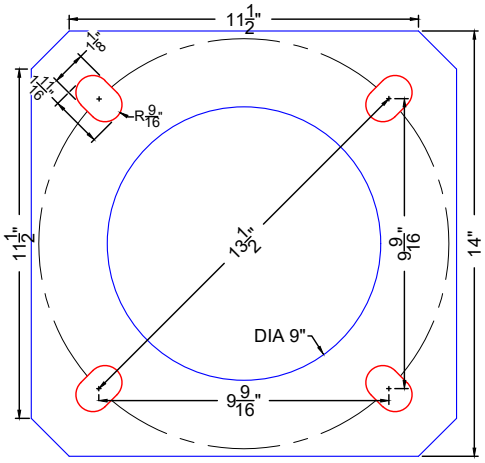

POLE FOUNDATION SCHEDULE										
STRUCTURE TYPE	FOUNDATION TYPE	X	Y	HOOPS			VERTICAL RODS			CU. YDS. CONCRETE
				NO.	SIZE	LIN. FT.	NO.	SIZE	LIN. FT.	
30' Light Pole Pedestrian Signal Pole	A	2'–0"	5'–0"	4	#4	23'–0"	6	#4	28'–0"	0.6
40' Light Pole	C	3'–0"	8'–0"	5	#4	44'–2"	8	#6	61'–4"	2.1

SIDE VIEW POLE FOUNDATION BASE DETAIL (SIDEWALK AREAS)

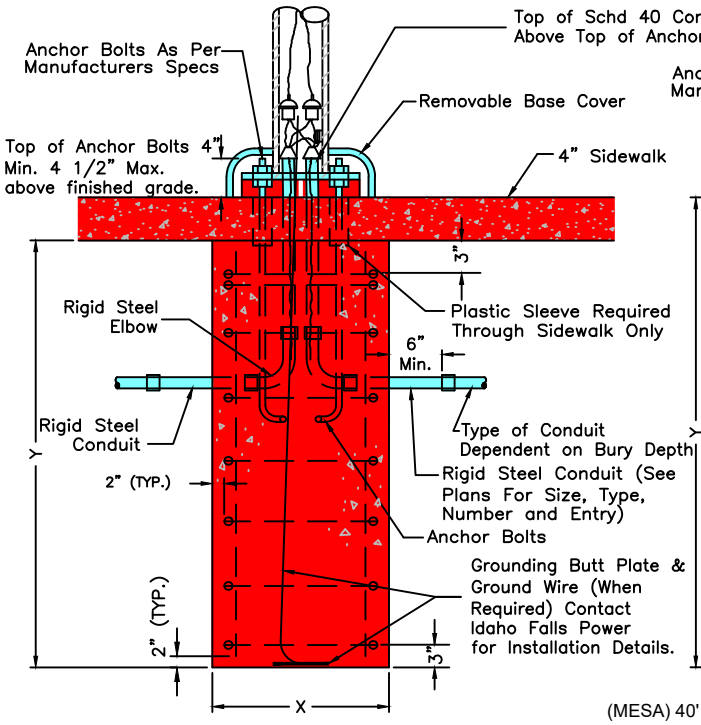

SIDE VIEW POLE FOUNDATION BASE DETAIL (LANDSCAPED AREAS)

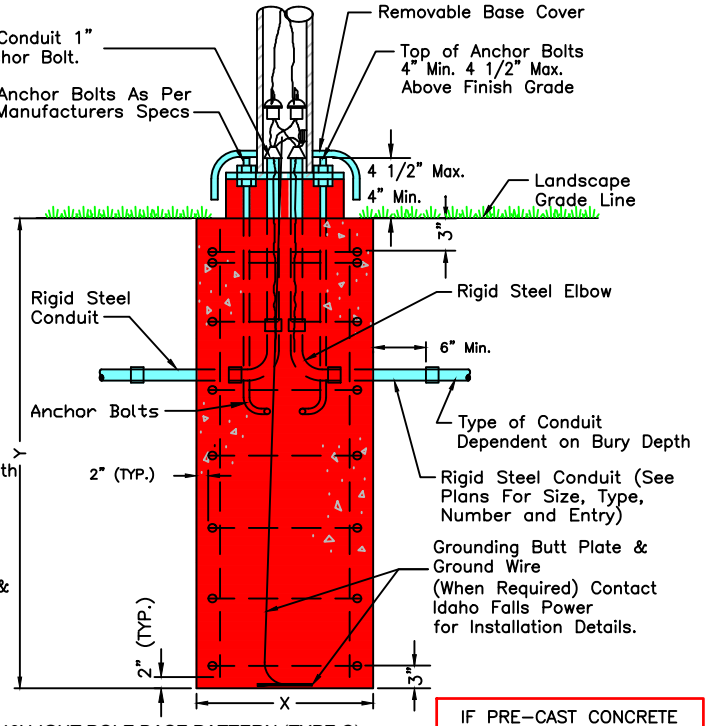

30' LIGHT POLE BASE PATTERN (TYPE A)

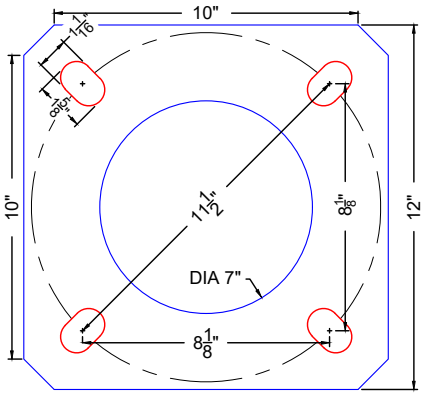

(MESA) 40' LIGHT POLE BASE PATTERN (TYPE C)

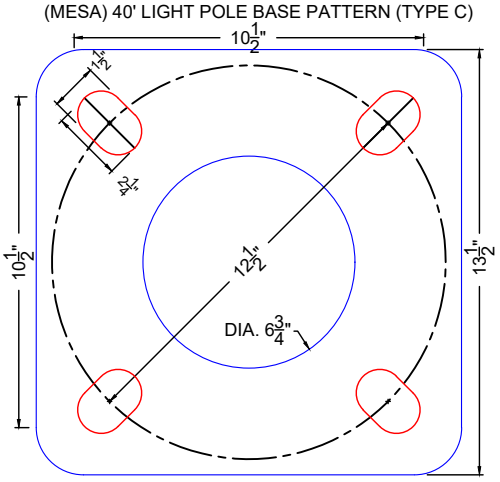

IF PRE–CAST CONCRETE LIGHT POLE IT SHALL MEET OR EXCEED ALL SPECIFICATIONS ABOVE

CONCRETE SHALL BE CLASS 4 CONCRETE (4,000 PSI) SEE SECTION 703.2.4 CONCRETE MIX CITY OF IDAHO FALLS SUPPLEMENTAL ISPWC STANDARDS

IDAHO FALLS POWER

SERVICE POLICY
FIGURE 10
DATE MODIFIED: 03/03/2026

TYPICAL RESIDENTIAL UNDERGROUND SERVICE

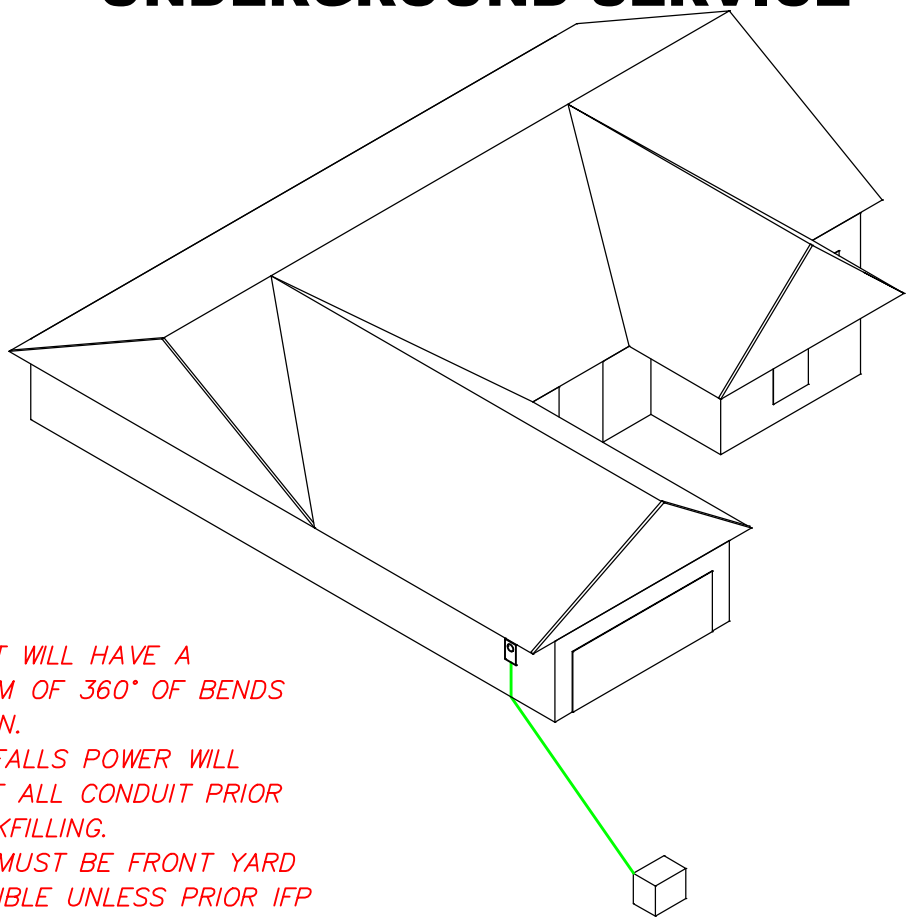

NOTES:

1. CONDUIT WILL HAVE A MAXIMUM OF 360° OF BENDS PER RUN.
2. IDAHO FALLS POWER WILL INSPECT ALL CONDUIT PRIOR TO BACKFILLING.
3. METER MUST BE FRONT YARD ACCESSIBLE UNLESS PRIOR IFP APPROVAL HAS BEEN OBTAINED.

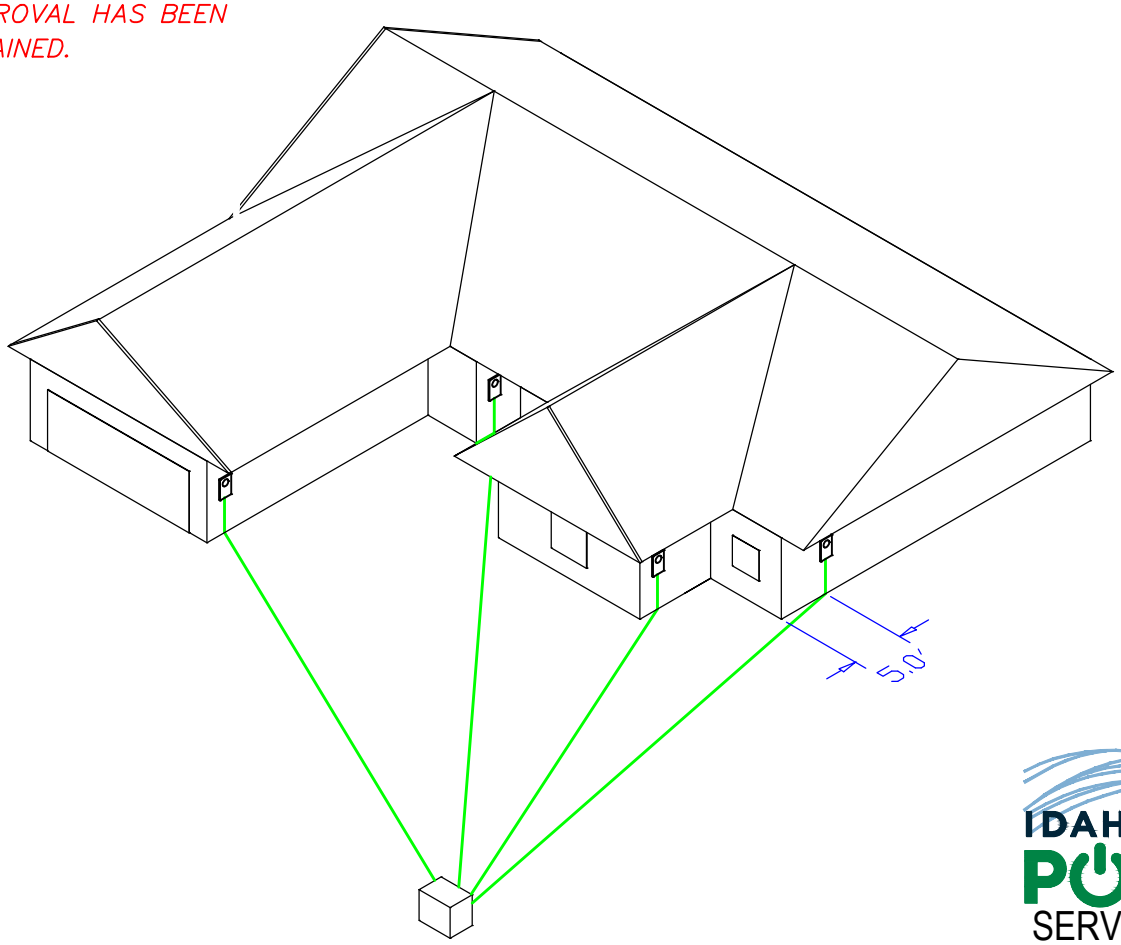

IDAHO FALLS POWER

SERVICE POLICY
FIGURE 11
DATE MODIFIED: 01/24/2025

TYPICAL RESIDENTIAL OVERHEAD SERVICE

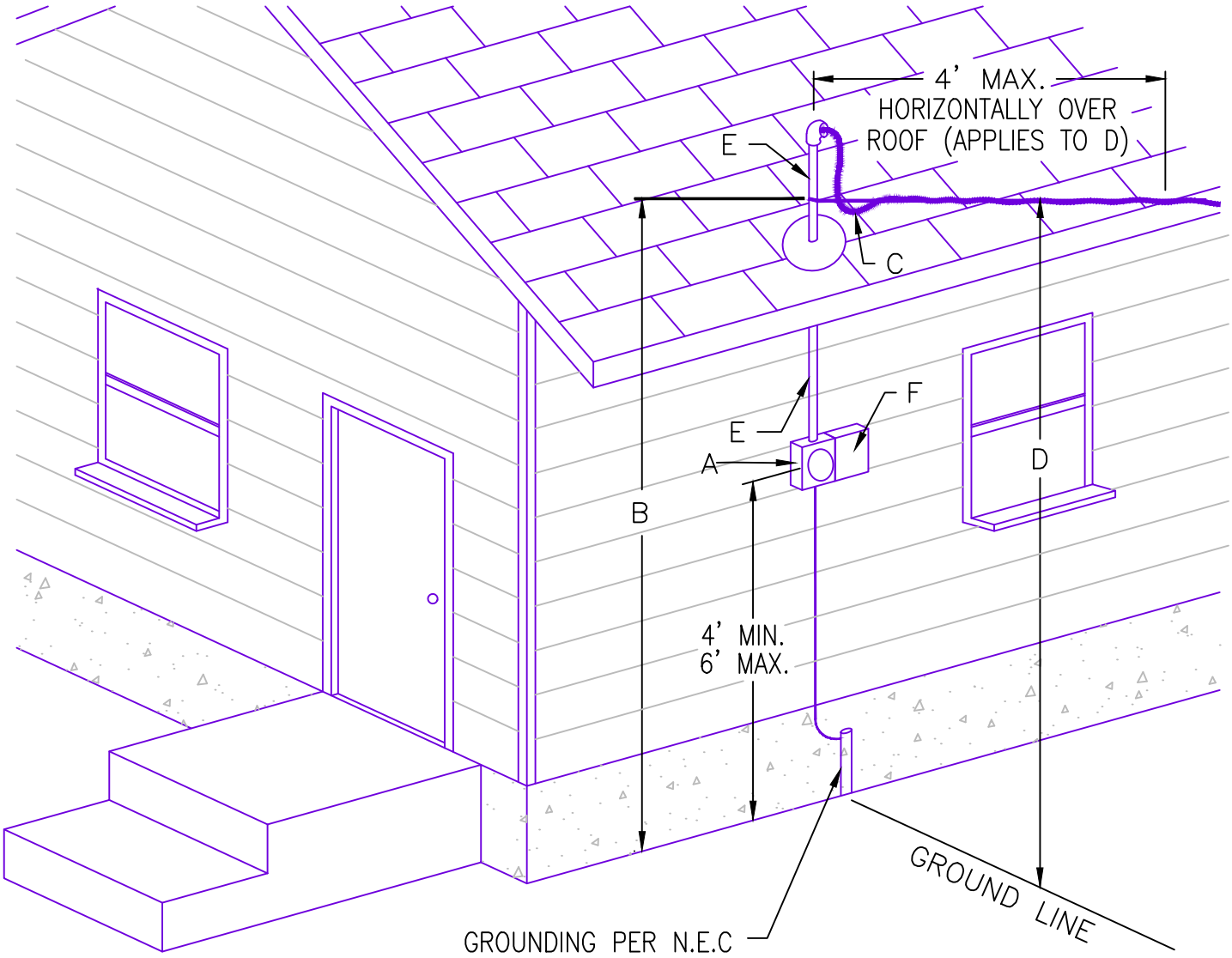

A. Meter location must be approved by Utility prior to installation.
B. Point of attachment 12' minimum above finished grade, or from any platform or projection from which conductors may be reached.
C. The cable and drip loop must be at least 18" above roof. (See NESC Rule note below)
D. 12' above finished grade – 14' over residential driveways – 16' over streets. More if practical.
E. Maximum 3'–6"; Service mast needs to be sized so as to support service conductors with a minimum size of 2" rigid galvanized steel (RGS) or IMC conduit. House knobs are not allowed for new or upgraded services, the point of attachment must be off of the mast.
F. External Main Disconnect

NOTE: Clearances B, C, D, and E are based on the current National Electrical Safety Code and are applicable where the voltage is limited to 150 volts to ground.

NESC RULE 234C3 covers clearance for services attached to buildings (120/240 volt services)

18" above roof within 6' of weatherhead
36" above roof more than 6' from weatherhead
10' over a deck
3' in any direction from windows
5' from porches, decks, fire escapes, etc

IDAHO FALLS POWER
SERVICE POLICY
FIGURE 12
DATE MODIFIED: 1/24/2024

ELECTRICAL SERVICE REQUIREMENTS

SEPARATION OF METER ASSEMBLIES FOR ELECTRIC AND GAS SERVICES

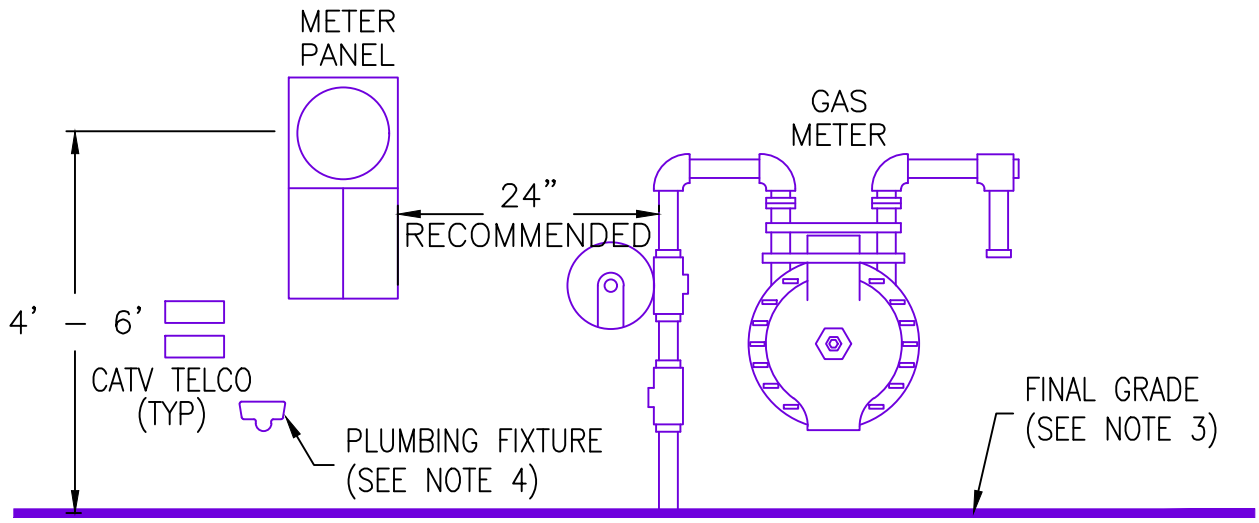

NOTES:

1. Size and dimensions of panels will vary. Drawings are not to scale.
2. This drawing pertains to both overhead and underground electric service applications.
3. Maintain 3' of clear, level and unobstructed work space in front of both meters.
4. Plumbing fixtures which extend more then 6" out from wall surface must be located a safe distance from the outside edge of the meter panel.

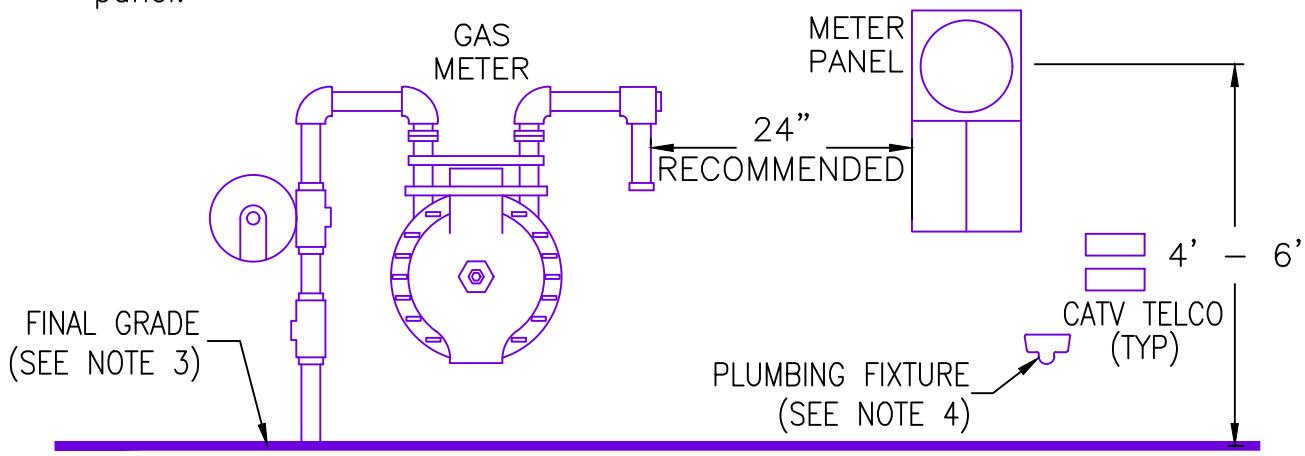

IDAHO FALLS POWER

SERVICE POLICY
FIGURE 13

DATE MODIFIED: 01/03/2019

FREE STANDING METER PANEL

(POST MOUNTED – 1ø)
(RESIDENTAIL UP TO 200 AMPS ONLY)

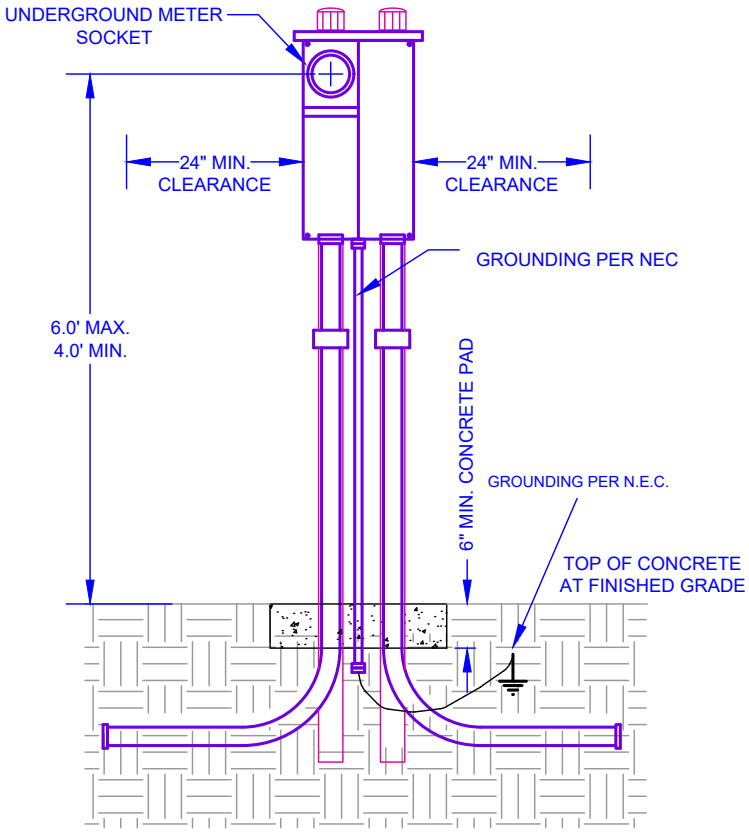

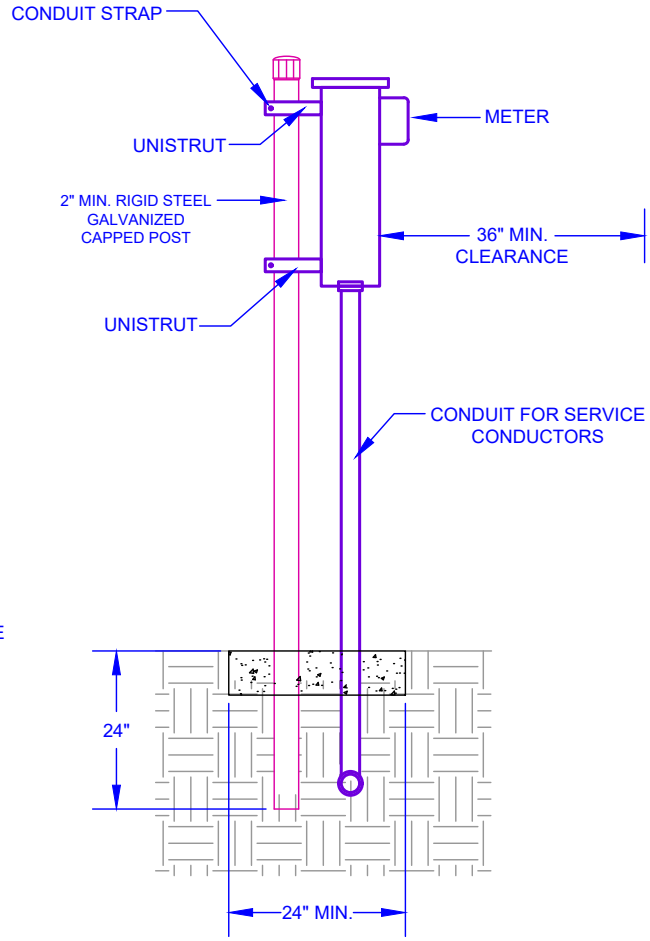

CUSTOMER WILL FURNISH AND INSTALL:

- METER SOCKET ENCLOSURE (UNDERGROUND TYPE)
- PEDESTAL HARDWARE
- CONDUIT
- RIGHT OF WAY
- TRENCH EXCAVATION AND BACKFILL
- GROUNDING PER NEC
- CONCRETE PAD, 24" X 24" X 6" DEEP

ADDITIONAL REQUIREMENTS:

1. WRITTEN APPROVAL FROM THE POWER COMPANY MUST BE OBTAINED BEFORE INSTALLING A FREE STANDING PEDESTAL.

2. THE METER PEDESTAL IS TYPICALLY LOCATED ADJACENT TO, OR IN, THE EASEMENT CLOSE TO THE DRIVEWAY. THE EXACT LOCATION OF THE METER MUST BE SPECIFIED AND/OR APPROVED BY THE POWER COMPANY.

3. REFER TO SERVICE POLICY FOR UNDERGROUND AND CONDUIT REQUIREMENTS.

4. SERVICE CONDUIT MUST BE PLUMB IN ALL DIRECTIONS.

5. METER PANEL SHOWN CAN BE USED IN 3–PHASE APPLICATIONS ONLY WITH WRITTEN APPROVAL FROM IDAHO FALLS POWER.

6. FOR OL LISTED MANUFACTURED PEDESTAL SERVICE ENTRANCES, METER HEIGHT REQUIREMENTS MAY VARY.

IDAHO FALLS POWER

SERVICE POLICY
FIGURE 14
DATE MODIFIED: 02/25/2026

FREE STANDING CT METER

(POST MOUNTED – 1ø OR 3ø)

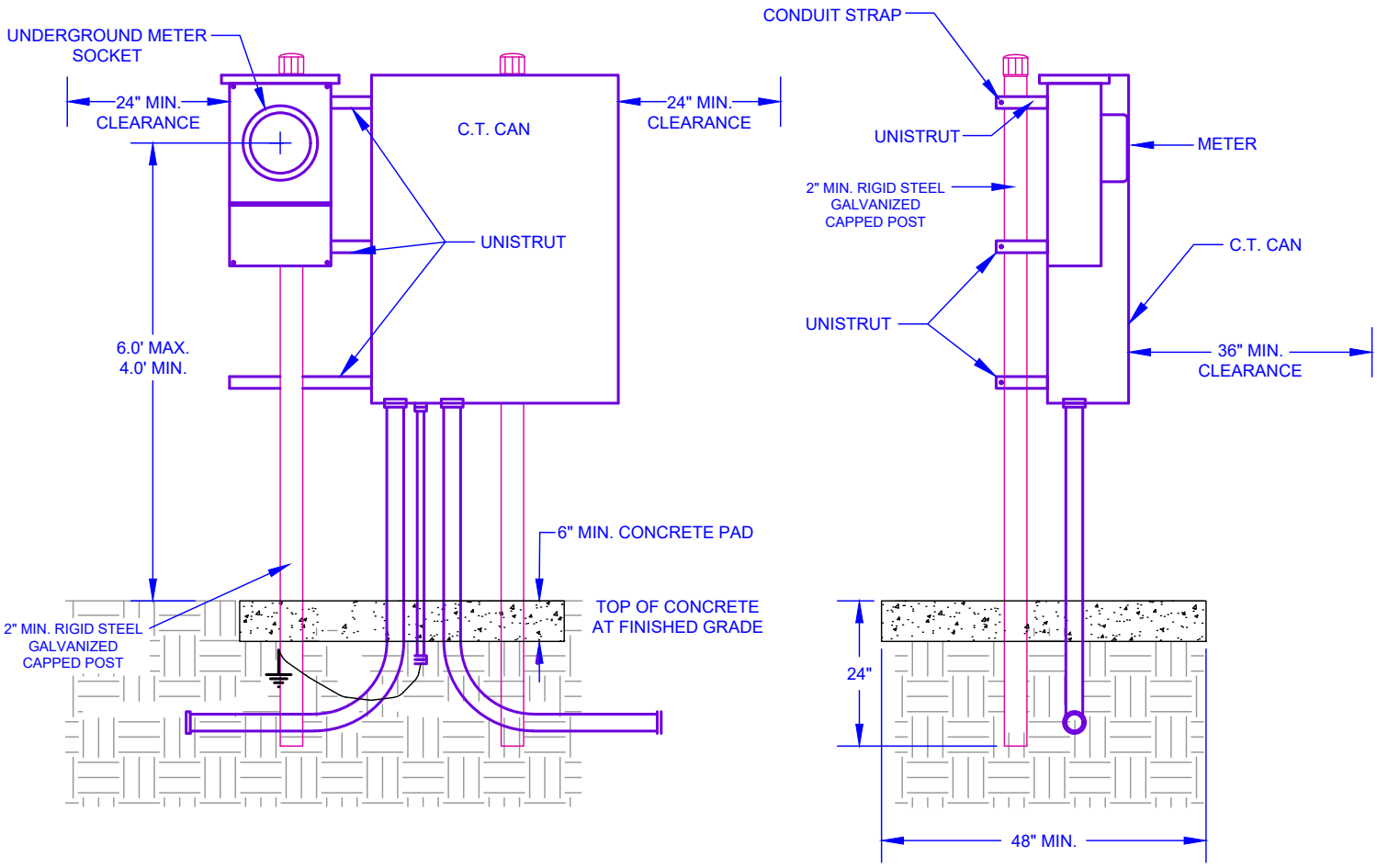

CUSTOMER WILL FURNISH AND INSTALL:

- METER SOCKET ENCLOSURE (UNDERGROUND TYPE)
- PEDESTAL HARDWARE
- CONDUIT
- RIGHT OF WAY
- TRENCH EXCAVATION AND BACKFILL
- GROUNDING PER NEC
- CONCRETE PAD, 48" X 48" X 6" DEEP

ADDITIONAL REQUIREMENTS:

1. WRITTEN APPROVAL FROM IDAHO FALLS POWER MUST BE OBTAINED BEFORE INSTALLING A FREE STANDING PEDESTAL.

2. THE METER PEDESTAL IS TYPICALLY LOCATED ADJACENT TO, OR IN, THE EASEMENT CLOSE TO THE TRANSFORMER. THE EXACT LOCATION OF THE METER MUST BE SPECIFIED AND/OR APPROVED BY IDAHO FALLS POWER.

3. REFER TO SERVICE POLICY FOR UNDERGROUND AND CONDUIT REQUIREMENTS.

4. SERVICE CONDUIT MUST BE PLUMB IN ALL DIRECTIONS.

5. C.T. CAN MUST BE ADJACENT TO METER BASE.

6. THE METER SOCKET SHALL BE LOCATED OPPOSITE THE HINGED SIDE, AND NOT ABOVE OR BELOW THE CABINET.

IDAHO FALLS POWER

SERVICE POLICY
FIGURE 15

DATE MODIFIED: 02/25/2026

CT CABINET WITH GROUND SLEEVE (801 - 3999 AMPS)

FOR 4000 AMPS AND ABOVE CONTACT IDAHO FALLS POWER

PLAN VIEW

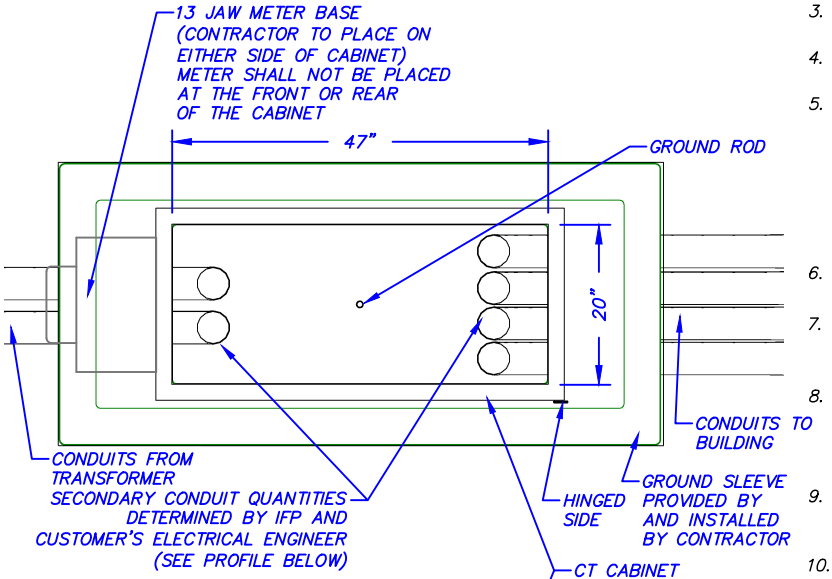

PROFILE VIEW

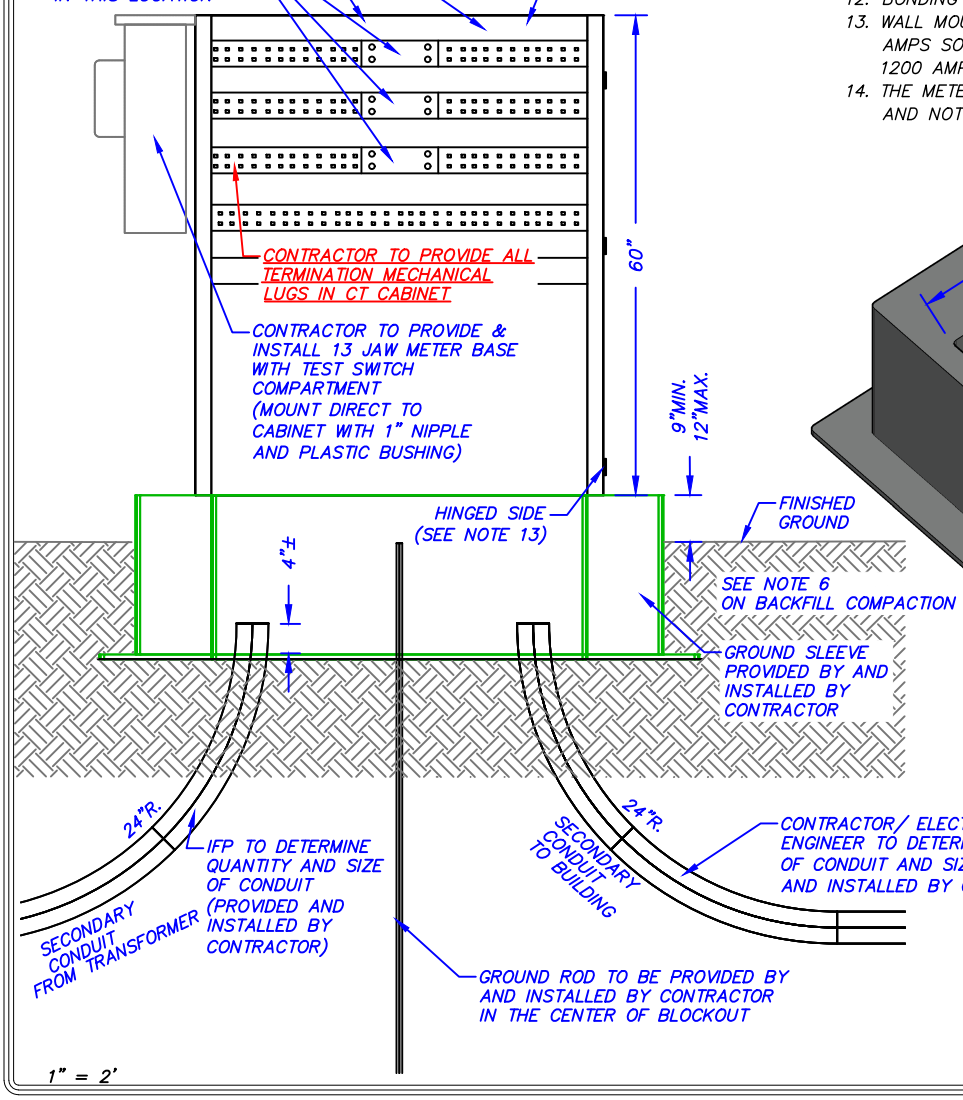

1" = 2'

ADDITIONAL NOTES:

1. INSTALL CONDUITS AS SHOWN IN DETAIL (NUMBER OF CONDUITS AND SIZE WILL VARY PER PLANS.
2. INSTALL BELL ENDS AND CAP ALL CONDUITS.
3. 24" RADIUS ELBOW CAN BE UTILIZED. IDENTIFY ALL CONDUITS FOR ROUTING.
4. CONTRACTOR TO PLACE CONTRACTOR PROVIDED GROUND ROD AS SHOWN IN DETAIL.
5. CONTRACTOR TO PROVIDE AND INSTALL GROUND SLEEVE WITH AN OPENING TO MATCH PROPOSED CABINET AS SHOWN. (A CONCRETE PAD CAN BE UTILIZED INSTEAD OF GROUND SLEEVE BUT MUST HAVE A 18"–24" DEEP CONCRETE VAULT FOR CONDUITS AND MATCH OPENING DIMENSIONS OF CABINET – CONCRETE PAD MUST MEET CT CABINET MANUFACTURER STANDARDS FOR STRENGTH OF THE FULLY LOADED CT CABINET AND BE MIN. 6" ABOVE GRADE)
6. CONTRACTOR TO ENSURE CONSISTENT BACKFILL COMPACTION & BASE (GROUND SLEEVE) MAINTAINS SHAPE & INTEGRITY.
7. CONTACT IFP FOR INSPECTION. TOP OF THE GROUND SLEEVE (CONCRETE PAD) SHALL BE 6" ABOVE FINISHED GRADE. POSITIVE DRAINAGE MUST BE PROVIDED.
8. CT CABINET WITH SPLIT BUS PER AMERICAN MIDWEST POWER SERVICE CONNECTION CABINET 'SCC' WITH CT PROVISION OR APPROVED EQUAL TO BE PROVIDED AND INSTALLED BY CONTRACTOR. (IDAHO FALLS POWER MUST APPROVE CT CABINET BEFORE ORDERING AND INSTALLING)
9. IDAHO FALLS POWER TO SIZE AND INSTALL SECONDARY CONDUCTOR FROM TRANSFORMER TO CT CABINET. THE CONTRACTOR MUST SUPPLY ALL TERMINATION MECHANICAL LUGS IN CT CABINET.
10. CONTRACTOR TO SUPPLY AND INSTALL ALL SECONDARY CONDUCTOR FROM CT CABINET TO BUILDING. CONTRACTOR TO PROVIDE AND INSTALL 13 JAW METER BASE WITH TEST SWITCH COMPARTMENT TO BE MOUNTED DIRECTLY TO THE CABINET WITH 1" NIPPLE AND PLASTIC BUSHING.
11. PROVIDE 2' CLEARANCE ON ALL SIDES EXCEPT FRONT PROVIDE 3' AND BE ABLE TO OPEN AT LEAST 90° WITHOUT ANY OBSTRUCTION.
12. BONDING WILL BE REQUIRED IF CONDUIT 90° BEND ARE METALLIC.
13. WALL MOUNTED CT METERING MAY BE ACCEPTABLE FOR UP TO 1200 AMPS SO LONG AS THE WALL MOUNTED CT METERING IS RATED FOR 1200 AMPS AND MEETS ALL UL RATINGS.
14. THE METER SOCKET SHALL BE LOCATED OPPOSITE THE HINGED SIDE, AND NOT ABOVE OR BELOW THE CABINET.

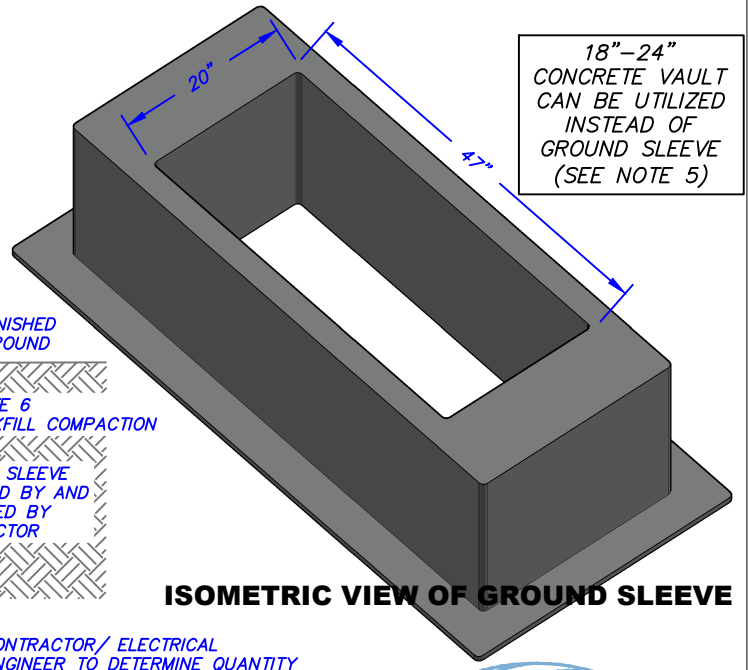

18"–24" CONCRETE VAULT CAN BE UTILIZED INSTEAD OF GROUND SLEEVE (SEE NOTE 5)

ISOMETRIC VIEW OF GROUND SLEEVE

IDAHO FALLS POWER

SERVICE POLICY
FIGURE 16
DATE MODIFIED: 02/25/2026

RISER DETAIL FOR 6" CONDUIT

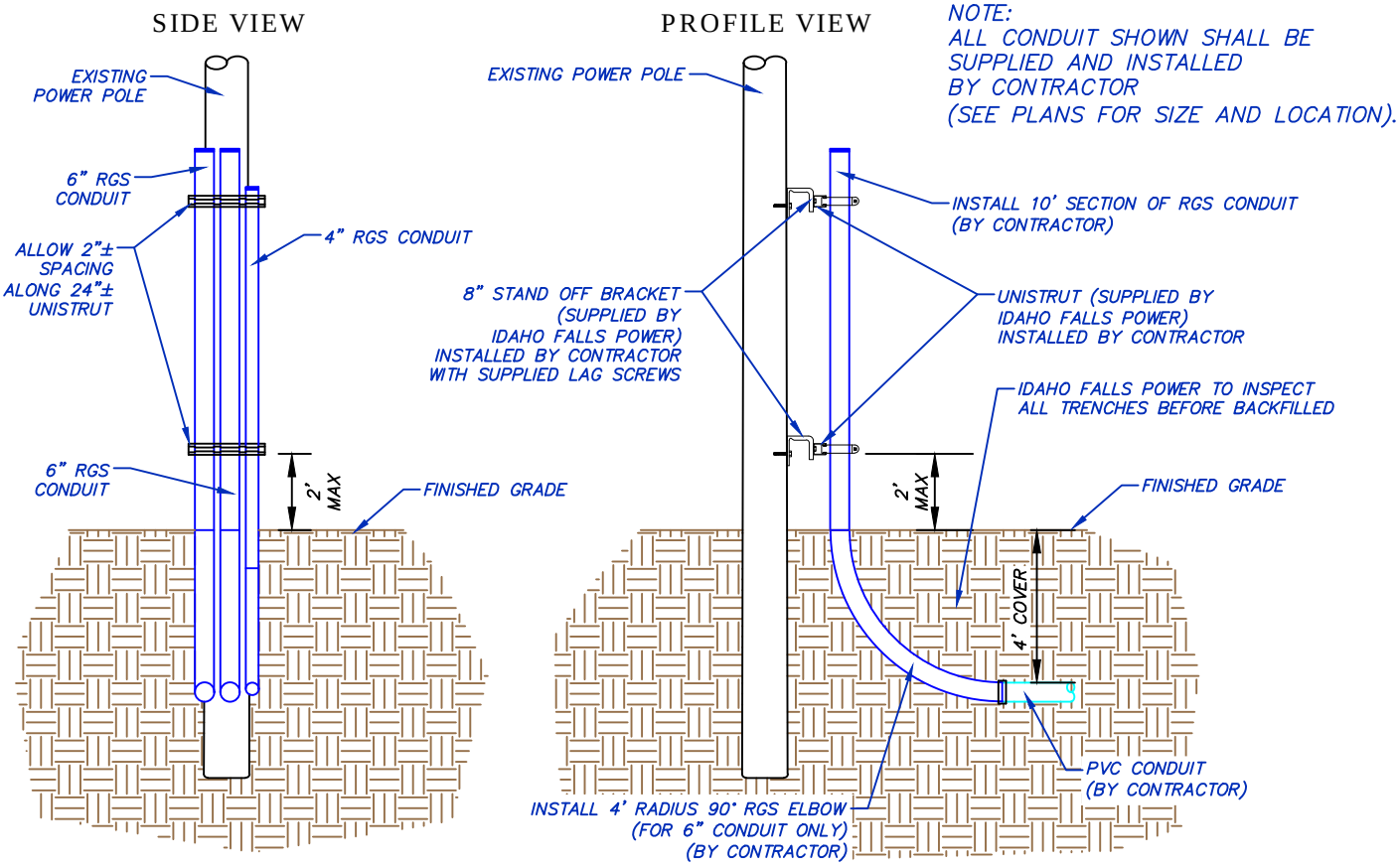

RISER DETAIL FOR 2" - 4" CONDUIT

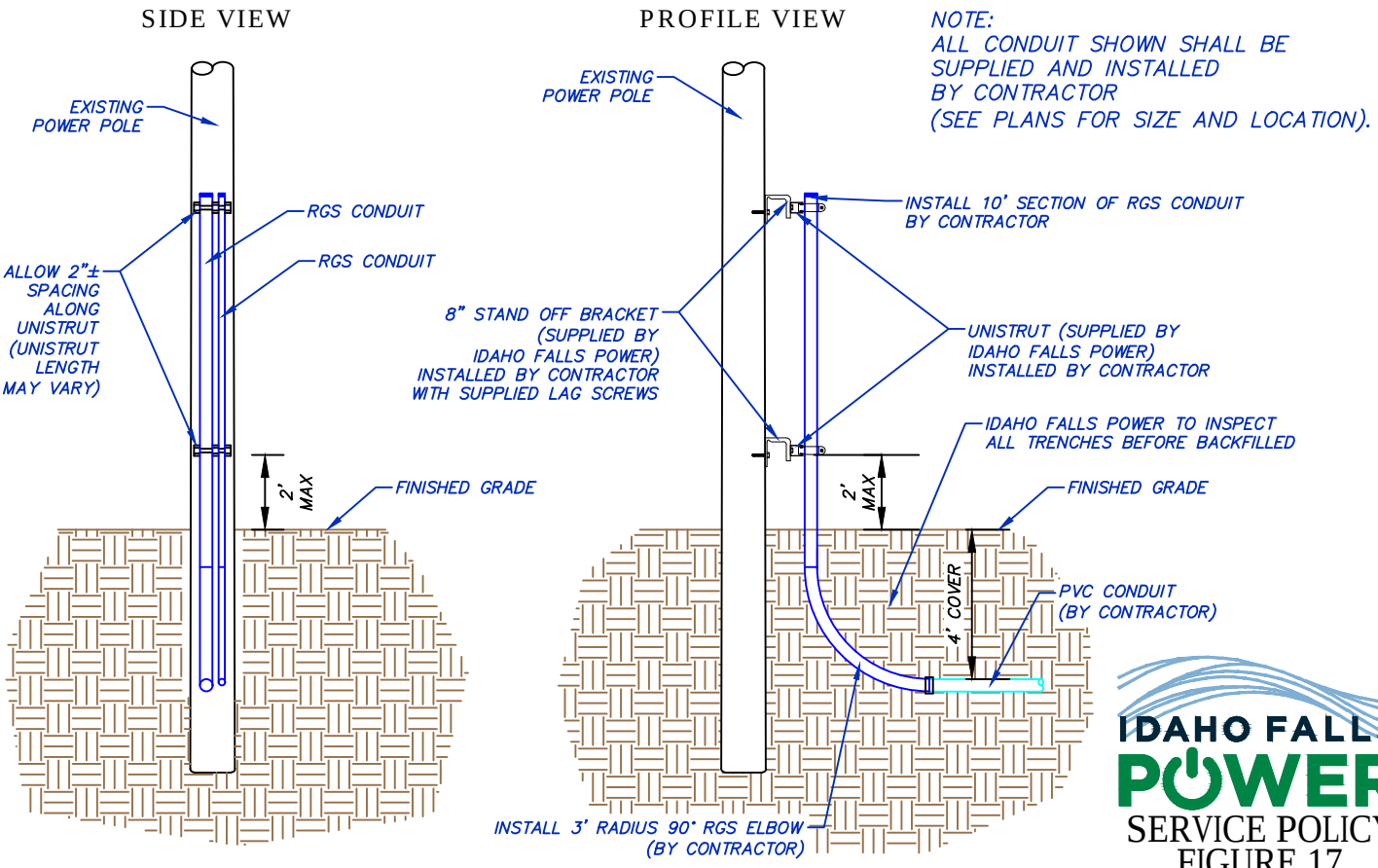

1" = 5'

IDAHO FALLS POWER

SERVICE POLICY
FIGURE 17
DATE MODIFIED: 12/20/2018

OVERHEAD CLEARANCES

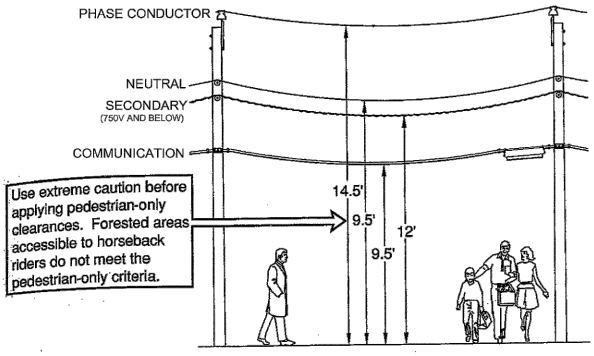

SPACES AND WAYS SUBJECT TO PEDESTRIANS OR RESTRICTED TRAFFIC ONLY

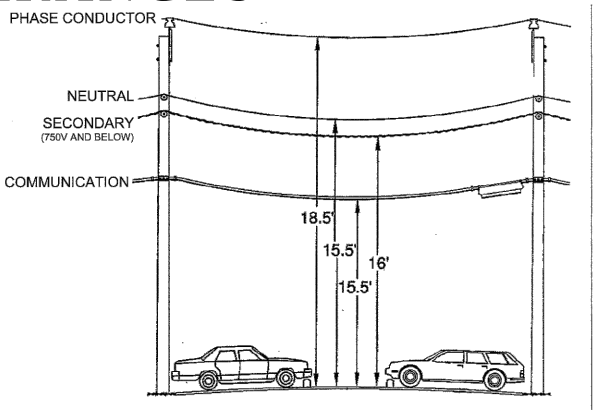

DRIVEWAYS, PARKING LOTS, AND ALLEYS

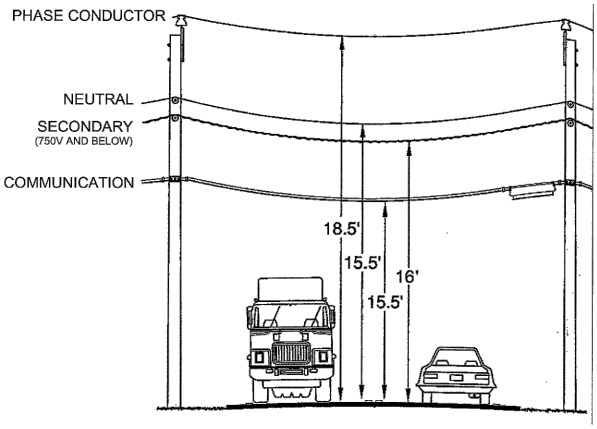

ROADS, STREETS, AND OTHER AREAS SUBJECT TO TRAFFIC

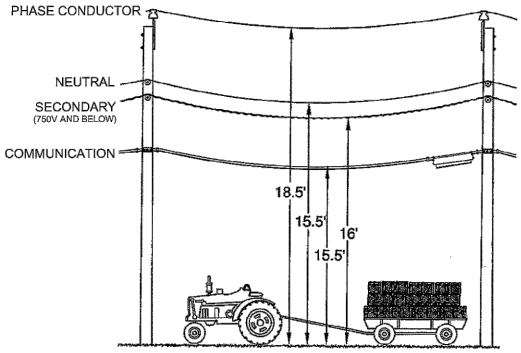

LAND TRAVERSED BY VEHICLES, SUCH AS CULTIVATED, GRAZING, FOREST, ORCHARD, ETC.

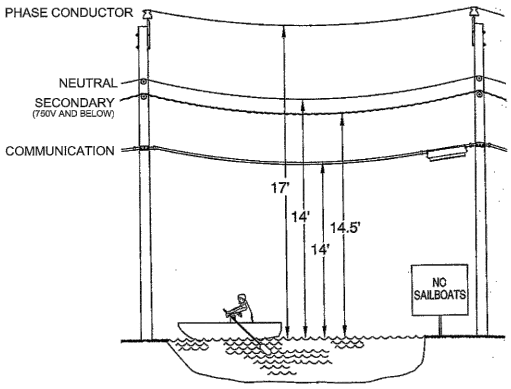

WATER AREAS NOT SUITABLE FOR SAIL BOATING OR WHERE SAILBOATING IS PROHIBITED

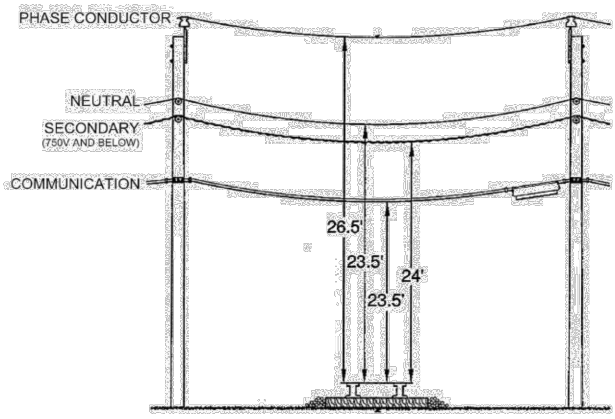

RAILROADS

RULES OF THE NESC AND THE NATIONAL ELECTRIC CODE (NEC) OVERLAP AT THE SERVICE POINT

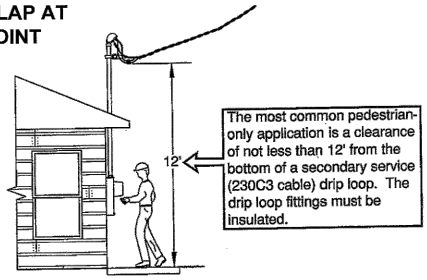

IDAHO FALLS POWER

SERVICE POLICY
FIGURE 18
DATE MODIFIED: 07/31/2013

OPERATION AND CUSTOMER CLEARANCES

Crane / Derrick Transmission Clearance

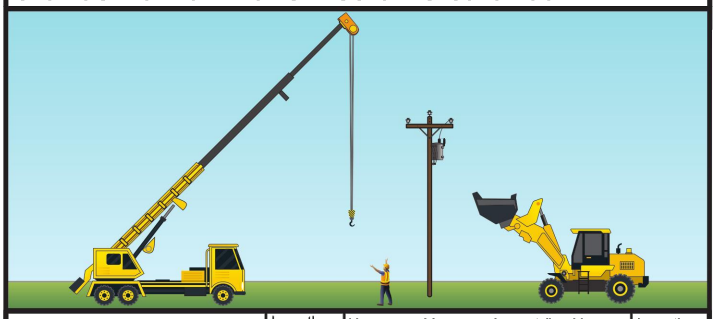

Crane / Derrick	Less than 50kV	Heavy machinery equipment (backhoes, front-end loaders, bulldozer, dump trucks)	Less than 50kV
Must Contact Electric Utility if maximum working radius in the work zone. *See OSHA 1926.1408 (a) (2)*	20 feet	Horizontal Minimum Clearance from. *See OSHA 1926.600 (a) (6)*	10 feet
Minimum Approach Distance, ONLY if Specific Controls in Place. *See OSHA 1926.1408 (a) (2) (iii)*	10 feet	Vertical Minimum Clearance from. *See OSHA 1926.600 (a) (6)*	10 feet

Crane, drilling rig & Mechanized Equipment Clearance

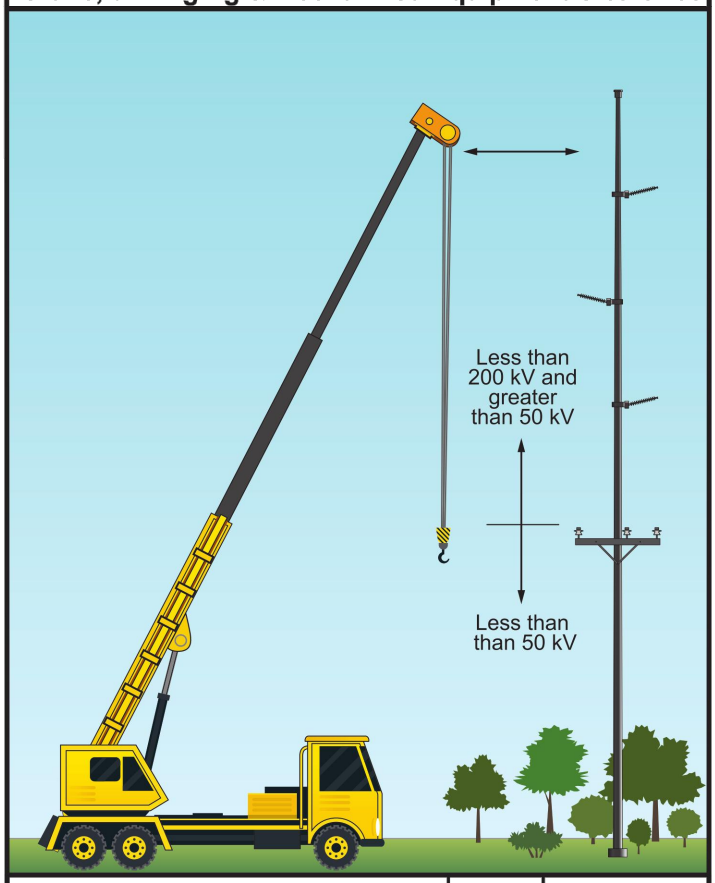

	Less than 50kV	Less than 200kV and Greater than 50
Must Contact Electric Utility if maximum working radius in the work zone. *See OSHA 1926.1408 (a) (2)*	20 feet	20 feet
Minimum Approach Distance, ONLY if Specific Controls in Place. *See OSHA 1926.1408 (a) (2) (iii)*	10 feet	15 feet

Scissor Lift & Scaffolding Clearance

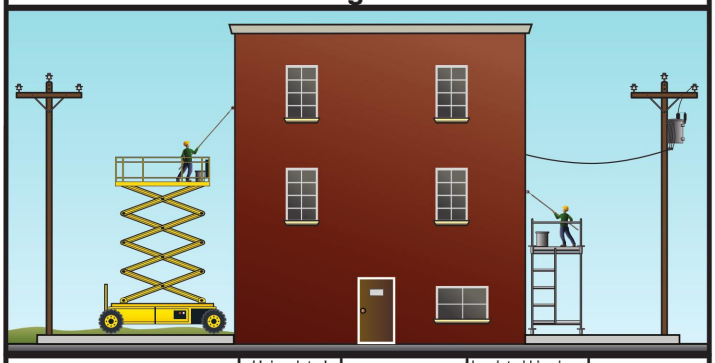

	Uninsulated Neutral Conductor	Insulated Line less than 300 Volts	Insulated Line less than 300 Volts to 750 volts	Uninsulated Lines 750 volts to 25 kV
Distance from Scaffold *See OSHA 1926.451 (f) (4)*	10 feet	3 feet	10 feet	10 feet
Worker or any conductive object *See OSHA 1910.333 (c) (3) (i) (B)*	Avoid Contact	1 feet	1 feet	2 feet

Light / Traffic Signal Pole - Vertical

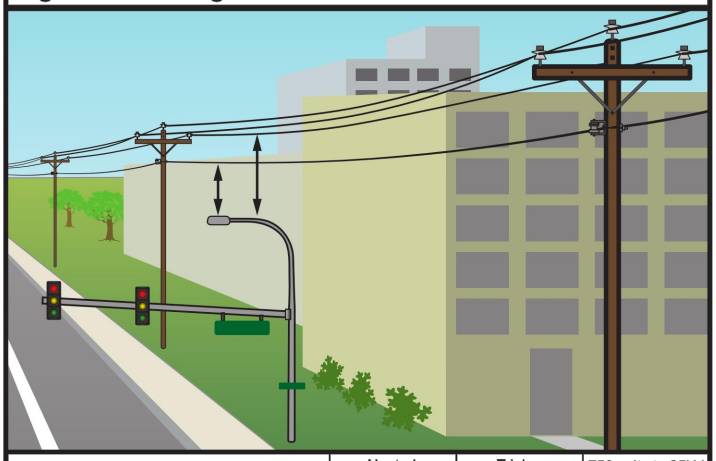

	Neutral	Triplex	750 volts to 25kV
Vertical - NESC 234B2	3 feet	3 feet	4.5 feet

** OSHA Minimum Clearances (typ. 10 ft.) apply when working on Light / Traffic Signal Pole See OSHA 1910.333 (c) (3) (i) (B)*

Light / Traffic Signal Pole - Horizontal

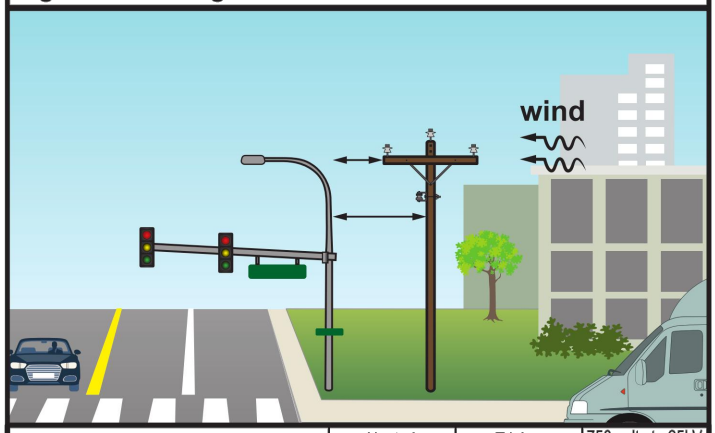

	Neutral	Triplex	750 volts to 25kV
Horizontal - NESC 234B1	3 feet	3 feet	5 feet
Horizontal 50MPH Wind - NESC 234B1	3 feet	3 feet	4.5 feet

** OSHA Minimum Clearances (typ. 10 ft.) apply when working on Light / Traffic Signal Pole See OSHA 1910.333 (c) (3) (i) (B)*

GUIDE FOR OPERATION OF EQUIPMENT NEAR POWER LINES
AND CUSTOMER OWNED POLES TO POWER LINES

SEE NESC AND OSHA FOR DETAILS AND EXCEPTIONS

DRAWING COURTESY OF HI-LINE ENGINEERING

IDAHO FALLS POWER

SERVICE POLICY
FIGURE 19
DATE MODIFIED: 2018

APPLICATION GUIDE FOR 2017 NESC TABLE 232-1

Railroads*

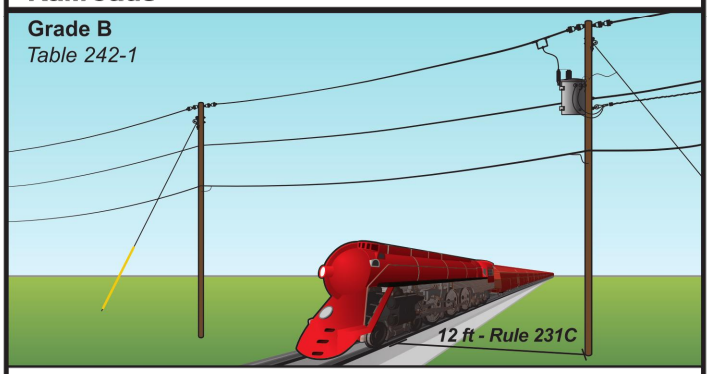

Vertical Clearance at Largest Vertical Sag *Table 232-1*

Neutral or Comm.	Grounded Span Guy	TPX	7.2/12.5 kV	14.4/25 kV	19.9/35 kV
23.5 ft		24.0 ft	26.5 ft		

**Railroad company may require greater clearance*

Trucks Over 8 Feet*

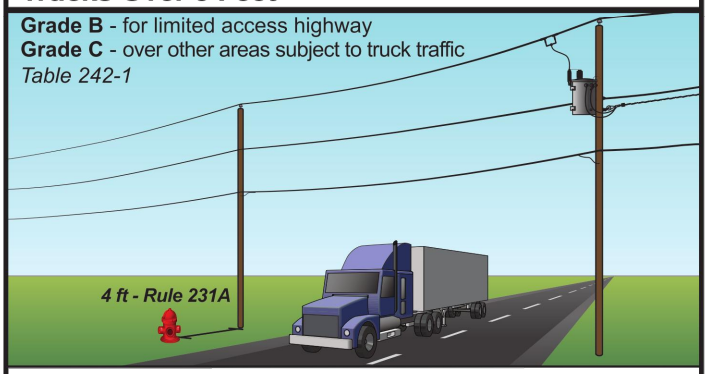

Vertical Clearance at Largest Vertical Sag *Table 232-1*

Neutral or Comm.	Grounded Span Guy	TPX	7.2/12.5 kV	14.4/25 kV	19.9/35 kV
15.5 ft		16.0 ft	18.5 ft		

**DOT may require greater clearance*

Water - No Sailboats

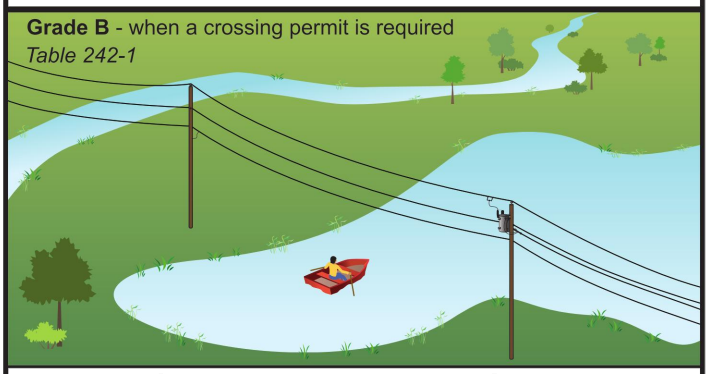

Vertical Clearance at Largest Vertical Sag *Table 232-1*

Neutral or Comm.	Grounded Span Guy	TPX	7.2/12.5 kV	14.4/25 kV	19.9/35 kV
14.0 ft		14.5 ft	17.0 ft		

**see NESC for sailboat clearances*

Over fields, orchards, forest, etc.

Vertical Clearance at Largest Vertical Sag *Table 232-1*

Neutral or Comm.	Grounded Span Guy	TPX	7.2/12.5 kV	14.4/25 kV	19.9/35 kV
15.5 ft		16.0 ft	18.5 ft		

**used by vehicles over 8 feet tall or riders on horseback*

Pedestrians Only*

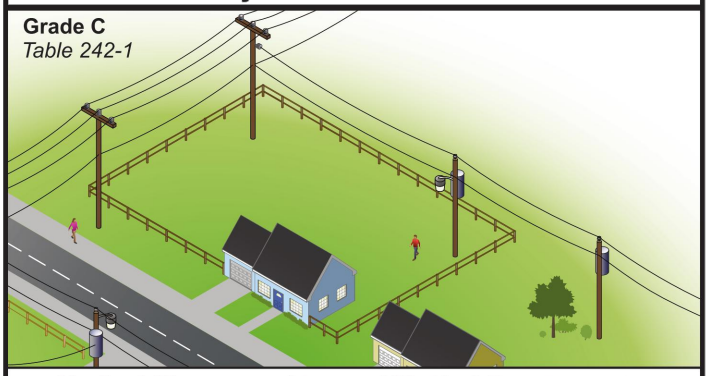

Vertical Clearance at Largest Vertical Sag *Table 232-1*

Neutral or Comm.	Grounded Span Guy	TPX	7.2/12.5 kV	14.4/25 kV	19.9/35 kV
9.5 ft		12.0 ft	14.5 ft		

**Not normally used by trucks or riders on horseback (very steep hills, swamps, etc.)*

Oversized Vehicles - greater than 14 feet in height

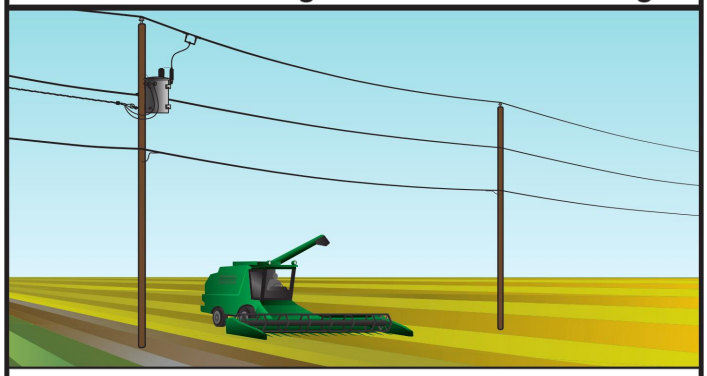

Vertical Clearance at Largest Vertical Sag *Table 232-1*

Neutral or Comm.	Grounded Span Guy	TPX	7.2/12.5 kV	14.4/25 kV	19.9/35 kV
X + 1.5 ft		X + 2 ft	X + 4.5 ft		

X = Known Height of oversized vehicle

SEE NESC AND OSHA FOR DETAILS AND EXCEPTIONS

DRAWING COURTESY OF HI–LINE ENGINEERING

IDAHO FALLS POWER

SERVICE POLICY
FIGURE 20
DATE MODIFIED: 2016

APPLICATION GUIDE FOR 2017 NESC

Clearance Over* or Near Grain Bins Loaded by Portable Auger NESC 234F2

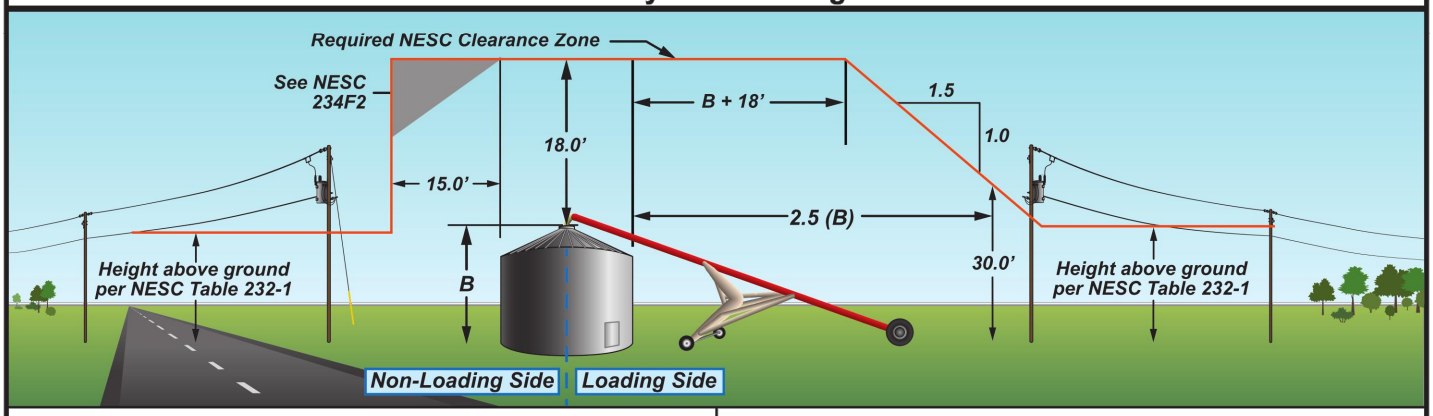

B = Vertical height to highest filling or probing port

Note: If B > 12 feet, vertical height of conductors is 30 feet at a distance equal to 2.5 times B

*Largest vertical sag

Non-Loading Side is when use of portable auger is limited by:

1. Permanent building/structure
2. Physical obstruction
3. Public road or other right of way
4. Designation or agreement

Clearance Over* or Near Swimming Pools NESC 234E1

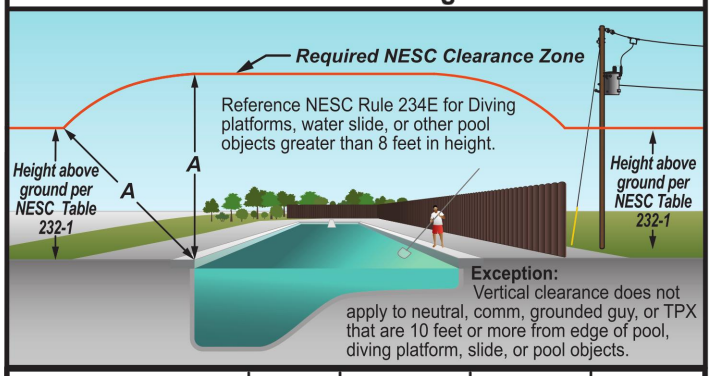

Neutral	TPX	7.2/12.5 kV	14.4/25 kV	19.9/35 kV
22.0 ft	22.5 ft	25.0 ft		

*Largest vertical sag

Aboveground pool with deck or ladder, clearance is from highest point upon which people can stand.

Clearance Over* or Near Billboards NESC 234C

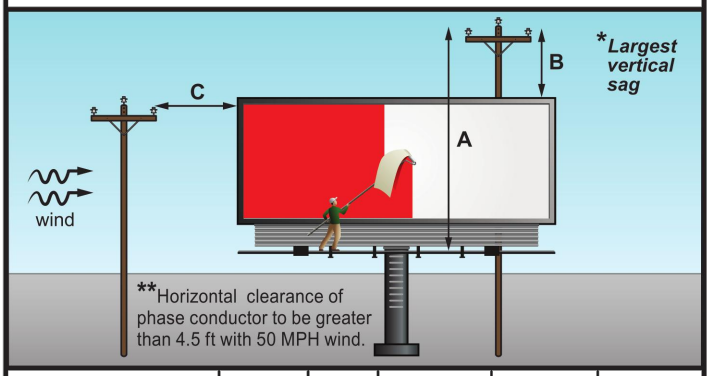

	Neutral	TPX	7.2/12.5kV	14.4/25kV	19.9/35kV
A-Where personnel walk	10.5 ft	11.0 ft	13.5 ft		
B - Other Surface	3.0 ft	3.5 ft	8.0 ft		
C - Horizontal**	4.5 ft	5.0 ft	7.5 ft		

Vertical Clearance Over* Buildings NESC 234C

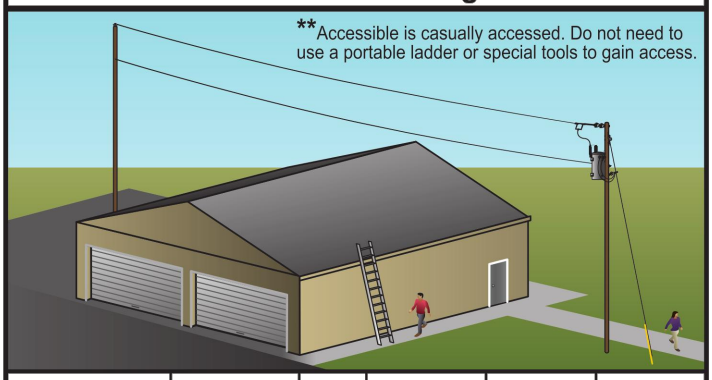

Roof	Neutral	TPX	7.2/12.5kV	14.4/25kV	19.9/35kV
Accessible**	10.5 ft	11.0 ft	13.5 ft		
Non-Accessible	3.0 ft	3.5 ft	12.5 ft		

*Largest vertical sag

Horizontal Clearance Adjacent to Buildings NESC 234C

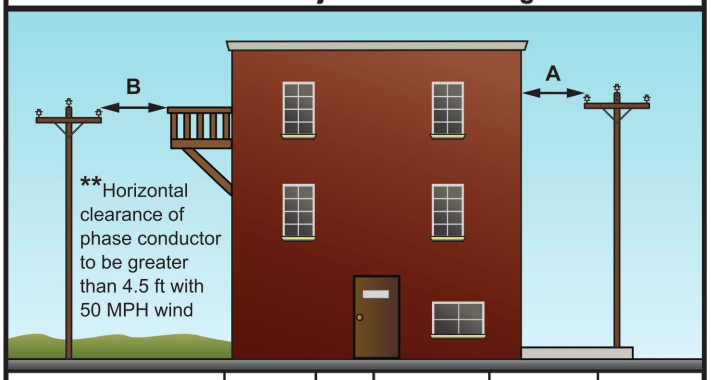

	Neutral	TPX	7.2/12.5kV	14.4/25kV	19.9/35kV
A-To Walls**	4.5 ft	5.0 ft	7.5 ft		
B - Accessible Areas**	4.5 ft	5.0 ft	7.5 ft		

SEE NESC AND OSHA FOR DETAILS AND EXCEPTIONS

DRAWING COURTESY OF HI-LINE ENGINEERING

IDAHO FALLS POWER

SERVICE POLICY
FIGURE 21
DATE MODIFIED: 2016

GROUND CLEARANCES 2017 NESC

2017 NESC GROUND CLEARANCE FOR 120/240V TRIPLEX SERVICE DROPS REFERENCE NESC TABLE 232-1 AND FOOTNOTES

CLEARANCE AT WORSE CASE FINAL SAG 32 F WITH ICE 120 F

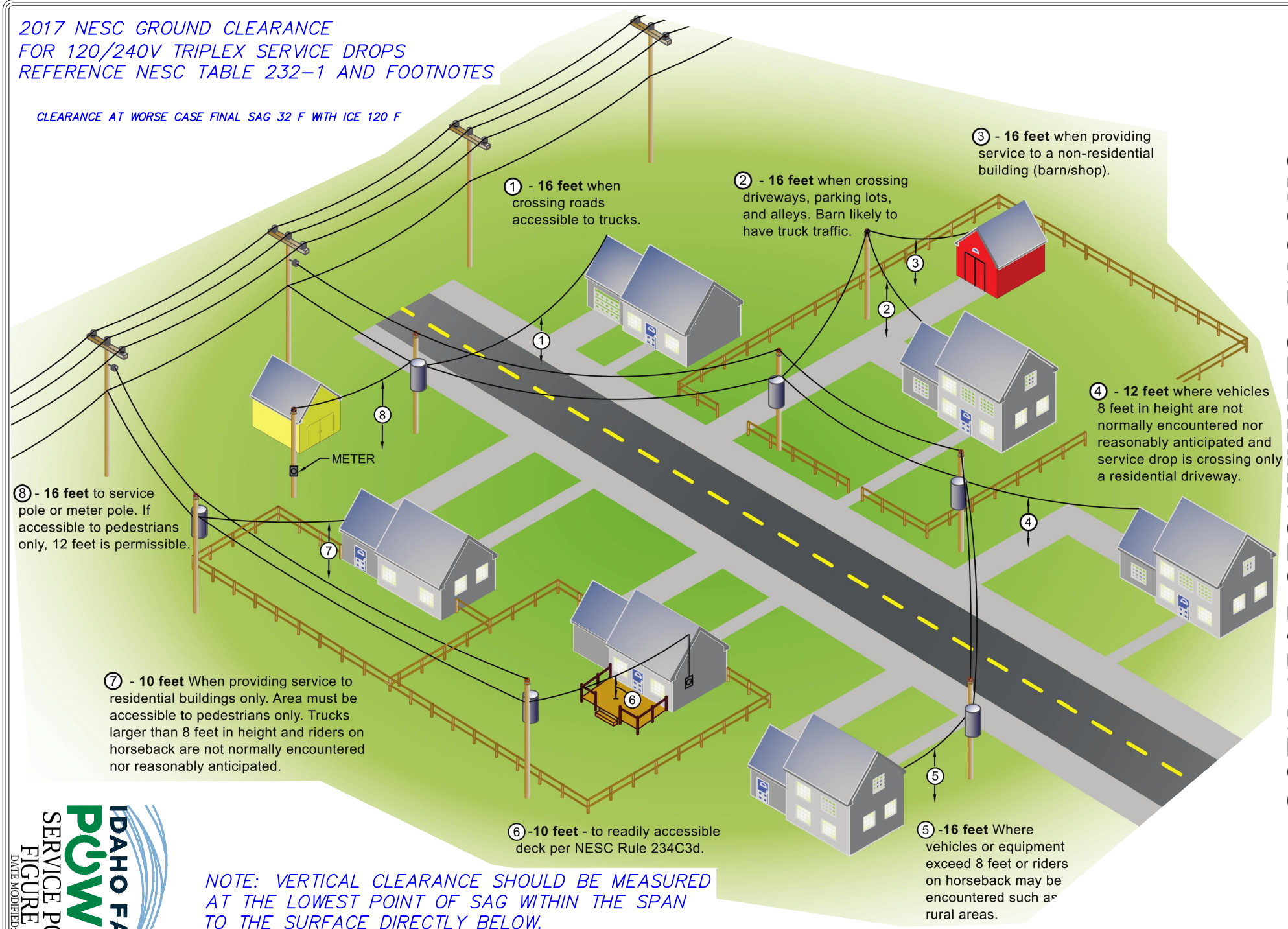

NOTE: VERTICAL CLEARANCE SHOULD BE MEASURED AT THE LOWEST POINT OF SAG WITHIN THE SPAN TO THE SURFACE DIRECTLY BELOW. TRUCKS ARE DEFINED AS ANY VEHICLE EXCEEDING 8 FEET IN HEIGHT.

DRAWING COURTESY OF HI-LINE ENGINEERING

IDAHO FALLS POWER

SERVICE POLICY
FIGURE 22
DATE MODIFIED: 2016

COMMUNICATION CABLE CLEARANCES

SUMMARY OF NESC CLEARANCES TO COMMUNICATION CABLES

SEE NESC AND OSHA FOR DETAILS AND EXCEPTIONS

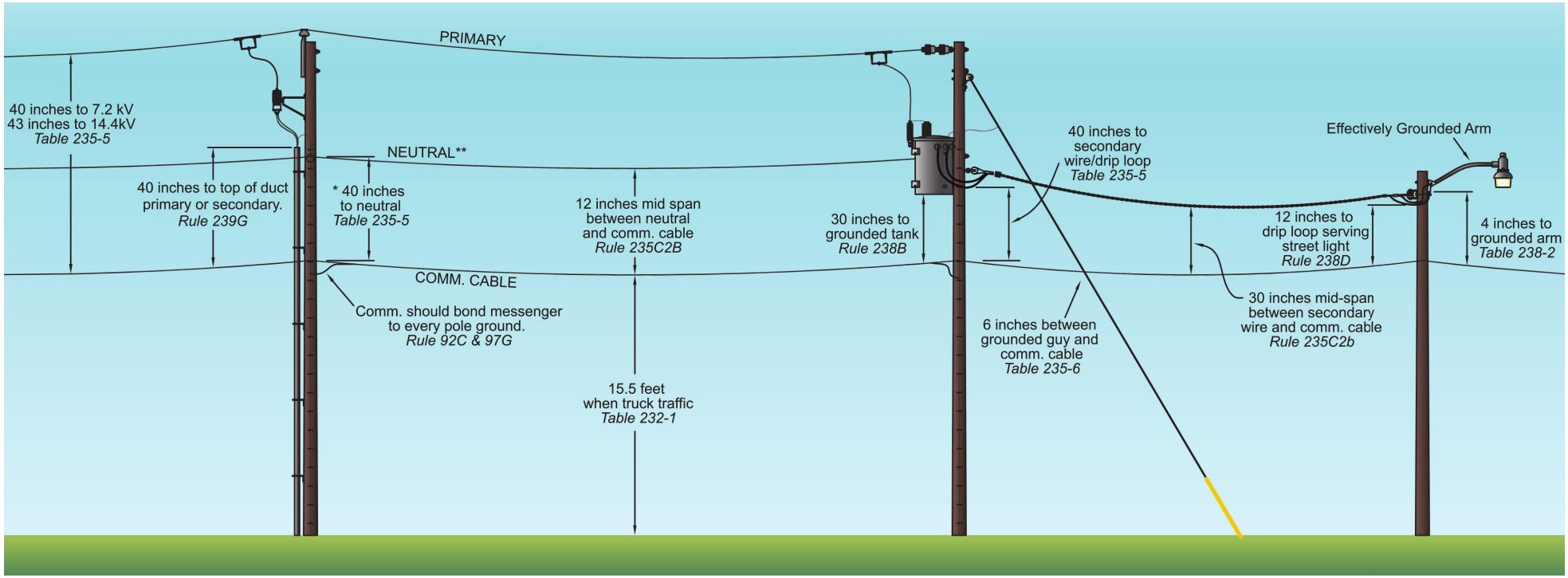

* 30 INCHES IS ALLOWED IF THE COMMUNICATION MESSENGER IS BONDED TO THE NEUTRAL THROUGHOUT THE SERVICE AREA. TABLE 235-5

** FIBER OPTIC CABLES IN THE SUPPLY SPACE (RULE 224A) WILL HAVE THE SAME REQUIRED CLEARANCE TO COMMUNICATION CABLES IN THE COMMUNICATION SPACE AS A MULT-GROUNDED NEUTRAL (RULE 235C)

A COMMUNICATION WORKER SAFETY ZONE IS 40 INCHES OF CLEARANCE BETWEEN COMMUNICATION LINES AND SUPPLY LINES / EQUIPMENT PER RULE 235C4 & 238E

DRAWING COURTESY OF HI-LINE ENGINEERING

IDAHO FALLS POWER

SERVICE POLICY

FIGURE 23

DATE MODIFIED: 2016

BOLLARD DETAIL

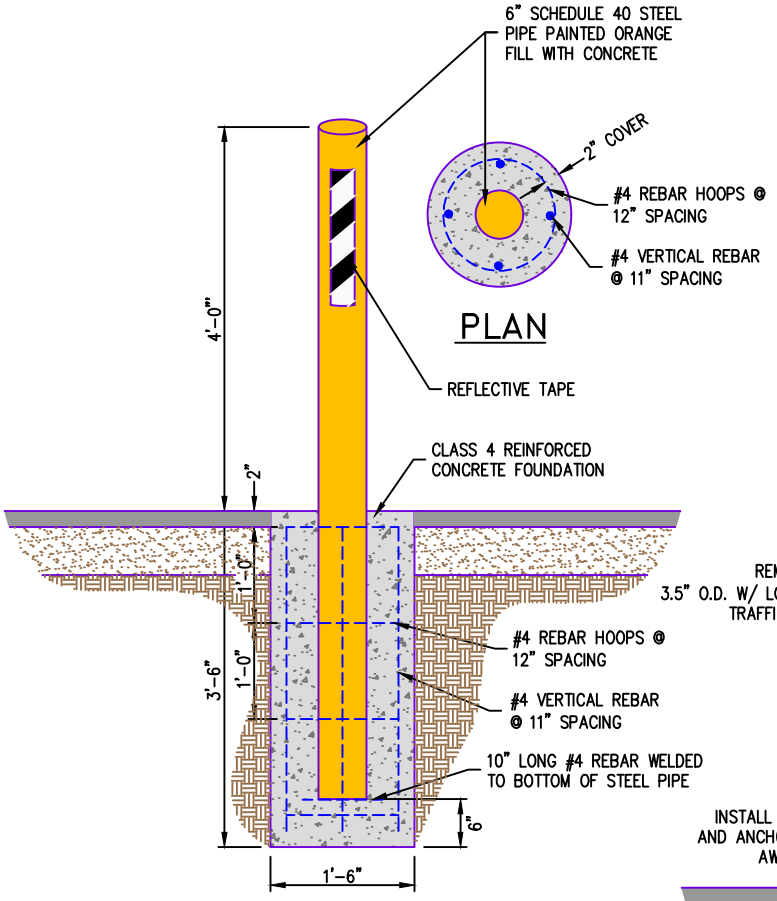

PERMANENT BOLLARD

SCALE – 1"=2'

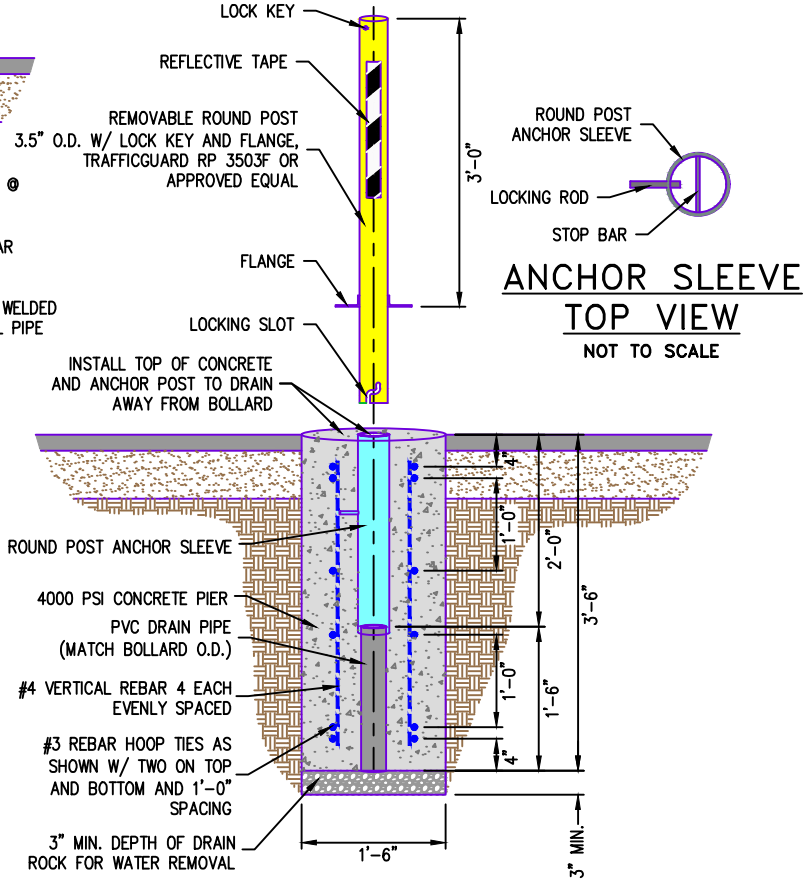

REMOVABLE BOLLARD

SCALE – 1"=2'

IDAHO FALLS POWER

SERVICE POLICY

FIGURE 24

DATE MODIFIED: 12/18/2009

ELECTRICAL VEHICLE PEDESTAL FOUNDATION PAD

(LEVEL 2)

TOP VIEW

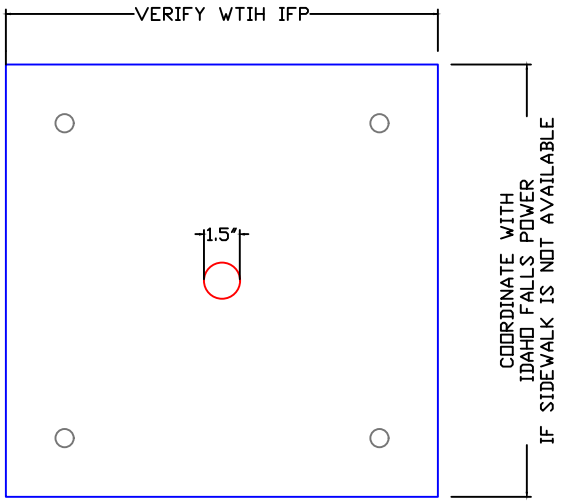

SIDE VIEW

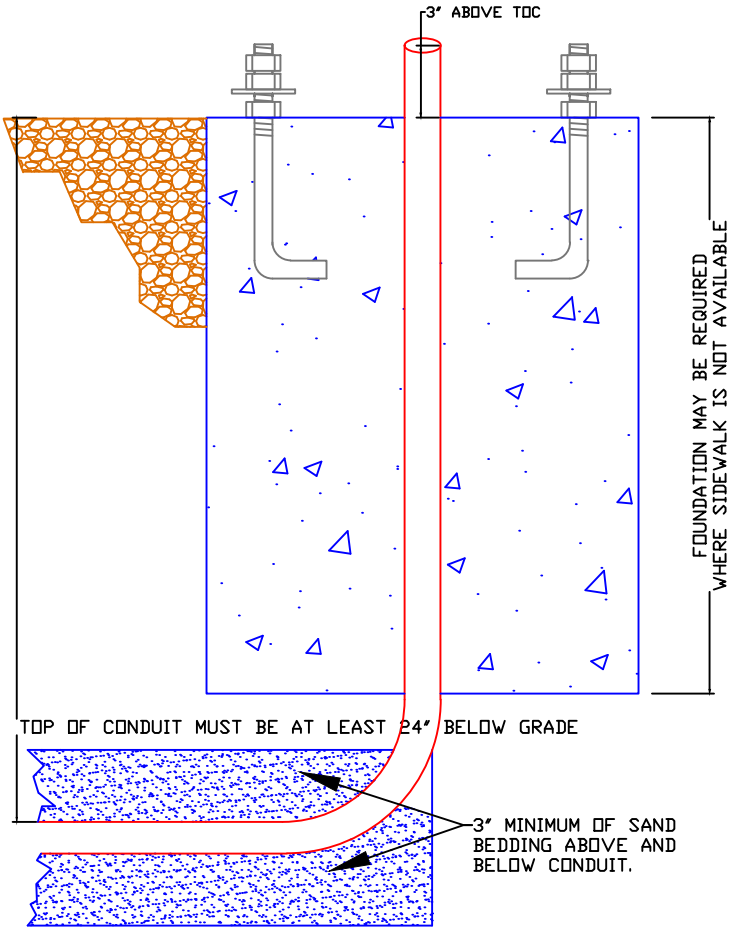

ADDITIONAL COMMENTS:

1. VERIFY FOUNDATION SPECIFICATIONS CONFORM WITH ELECTRICAL VEHICLE PEDESTAL.
2. INSTALL CONDUITS TO WITHIN 3" ABOVE CONCRETE PAD.
3. CONDUIT SHALL BE MIN. 1.5" DIAMETER.
4. INSTALL BELL ENDS AND CAP ALL CONDUITS.
5. THE PAD LOCATION SHALL BE COMPACTED TO A MINIMUM OF 95% OF MAXIMUM DENSITY PRIOR TO PLACEMENT OF CONCRETE.
6. THE ELECTRIC VEHICLE PEDESTAL SHALL NOT BE INSTALLED UNTIL THE CONCRETE HAS CURED A MINIMUM OF (7) DAYS. IF THE TEMPERATURE IS EXPECTED TO DROP BELOW 40°F, THERMAL BLANKETS MUST BE USED FOR A MINIMUM PERIOD OF 72 HOURS.
7. DO NOT PLACE PAD ON THE FROZEN EARTH.
8. TOP OF THE ELECTRIC VEHICLE PEDESTAL PAD SHALL BE CONSTRUCTED TO A MINIMUM OF 4" ABOVE FINISHED GRADE.
9. THE WIRE MUST PROTRUDE 72" FROM THE SURFACE OF THE CONCRETE. USE #6 AWG, 75°C COPPER WIRE TO CONNECT TO SUPPLY CIRCUIT.
10. RECOMMEND USING 4x3/8"-16 S/S L-HOOK 8" ANCHOR BOLTS. THE CENTER OF
11. THE PAD MUST BE PLACED MINIMUM 36" BEHIND THE CURB IF THERE IS NO WHEEL STOP OR MINIMUM 12" BEHIND THE CURB IF THERE IS A WHEEL STOP.
12. CONSULT ELECTRICIAN FOR TYPE OF CONDUIT TO BE USED.
13. CONSULT MANUFACTURER FOR MOUNTING AND ASSEMBLY INSTRUCTIONS.

EXAMPLE OF LEVEL 2 CHARGING PAD

CONTRACTOR TO PROVIDE THE FOLLOWING:
FOUNDATION, CONDUIT, WIRE
IDAHO FALLS POWER TO PROVIDE THE FOLLOWING:
EV CHARGING STAND AND CHARGER
SEE IDAHO FALLS POWER COMMERCIAL LEASING PROGRAM FOR MORE INFORMATION

IDAHO FALLS POWER
SERVICE POLICY
FIGURE 25
DATE MODIFIED: 1/24/2024

COMMERCIAL LIGHTING CONTROL PANEL & FOUNDATION

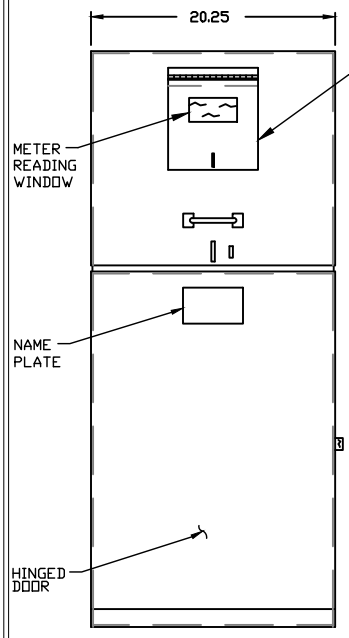

FRONT VIEW

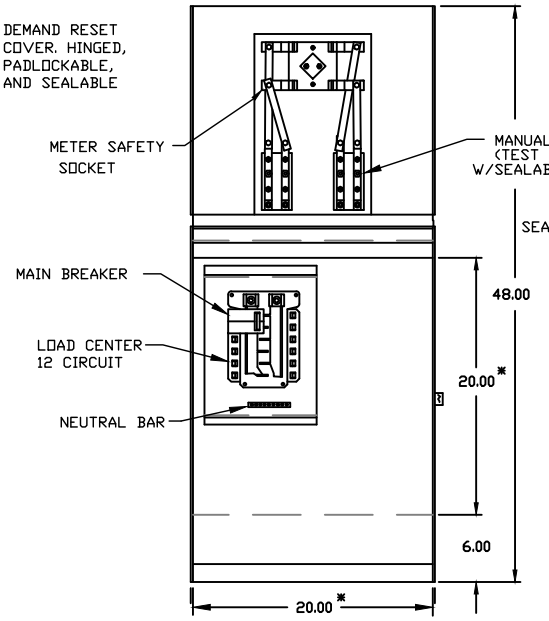

* CUSTOMER EQUIPMENT AREA 20.00 X 20.00 X 8.25

FRONT VIEW

LESS DOOR, DEADFRONT, AND COVER

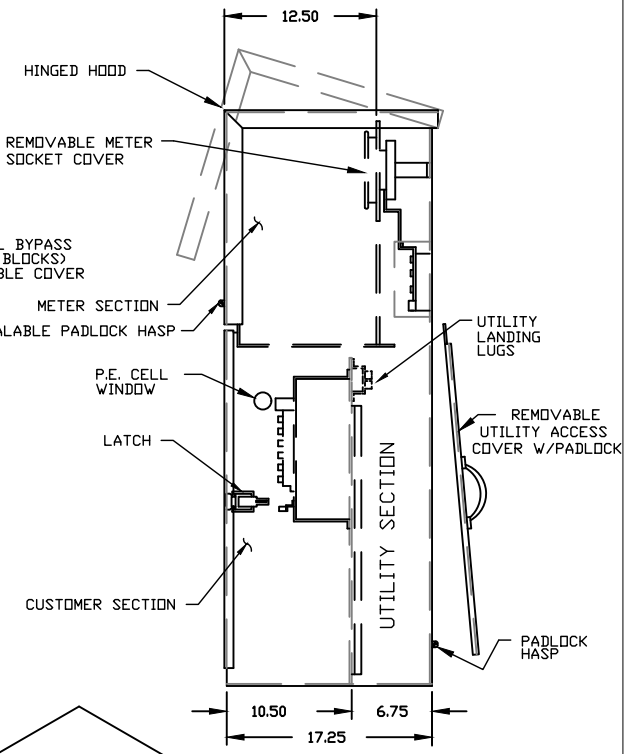

SIDE VIEW

* *A SECOND EXTERNAL GROUND IS REQUIRED PER NEC, COORDINATE WITH CITY OF IDAHO FALLS BUILDING DEPARTMENT.*

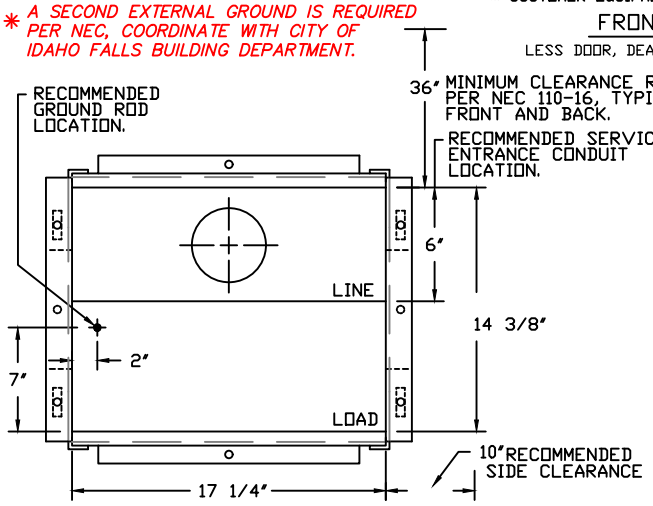

PLAN VIEW

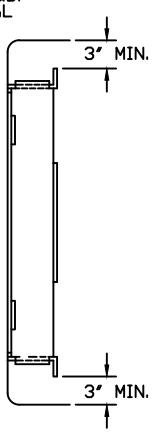

SIDE VIEW

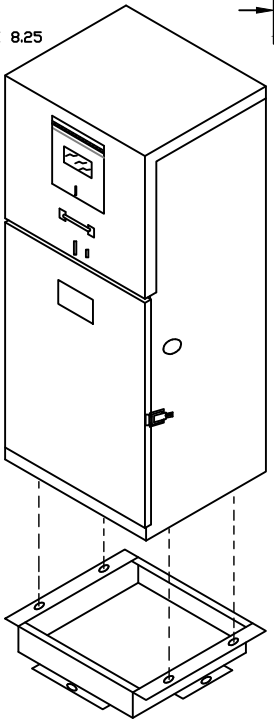

SEE FIGURE 27 FOR GENERAL NOTES, WIRING DIAGRAM, GENERAL NOTES, AND POLE BASE DETAIL

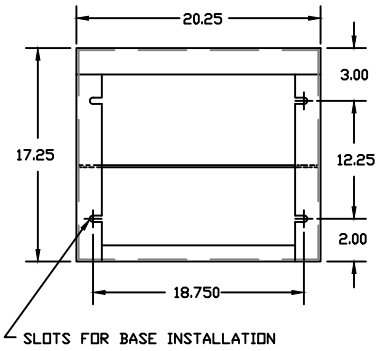

BOTTOM VIEW

MOUNTING SLOT DETAIL

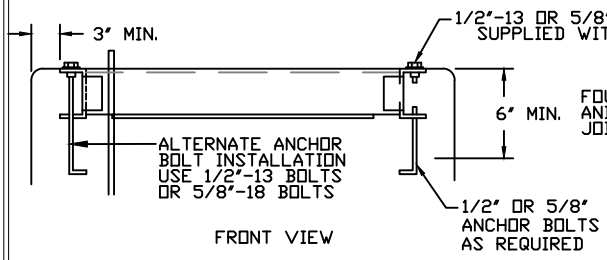

FRONT VIEW

IDAHO FALLS POWER WILL PROVIDE THE COMMERCIAL LIGHTING CONTROL PANEL & BASE FROM MYERS POWER PRODUCTS, INC., MODEL NUMBER MEUG20-M100TS

LIGHTING CIRCUIT & CONTROL CABINET TO BE INSPECTED BY CITY OF IDAHO FALLS BUILDING DEPARTMENT.

CONTRACTOR REQUIRED TO PROVIDE CONCRETE BASE FOUNDATION FOR THE PANEL TO SIT ON. THE CONCRETE MUST BE A MINIMUM OF 4" THICK AND CONFORM TO MANUFACTURER'S SPECIFICATIONS FOR THE LIGHTING PANEL. ALLOW FOR 1" REVEAL AT FINISHED GRADE.

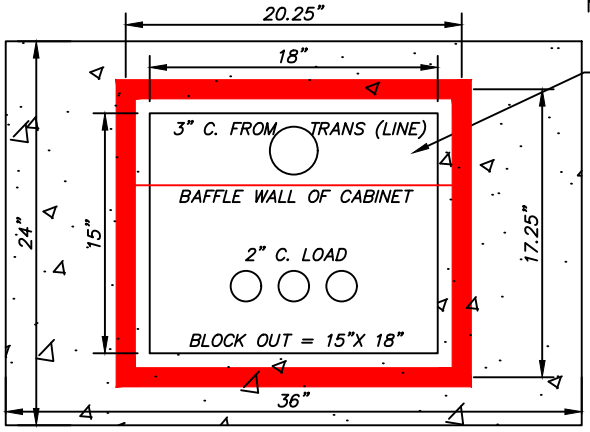

BASE DETAIL

IFP WILL PULL AND PROVIDE THE SECONDARY WIRE IN THE CONTRACTOR'S SUPPLIED CONDUIT BETWEEN THE TRANSFORMER AND THE LIGHTING CONTROL PANEL.

IDAHO FALLS POWER

SERVICE POLICY

FIGURE 26

DATE MODIFIED: 2/25/2026

COMMERCIAL LIGHTING AND DIAGRAM

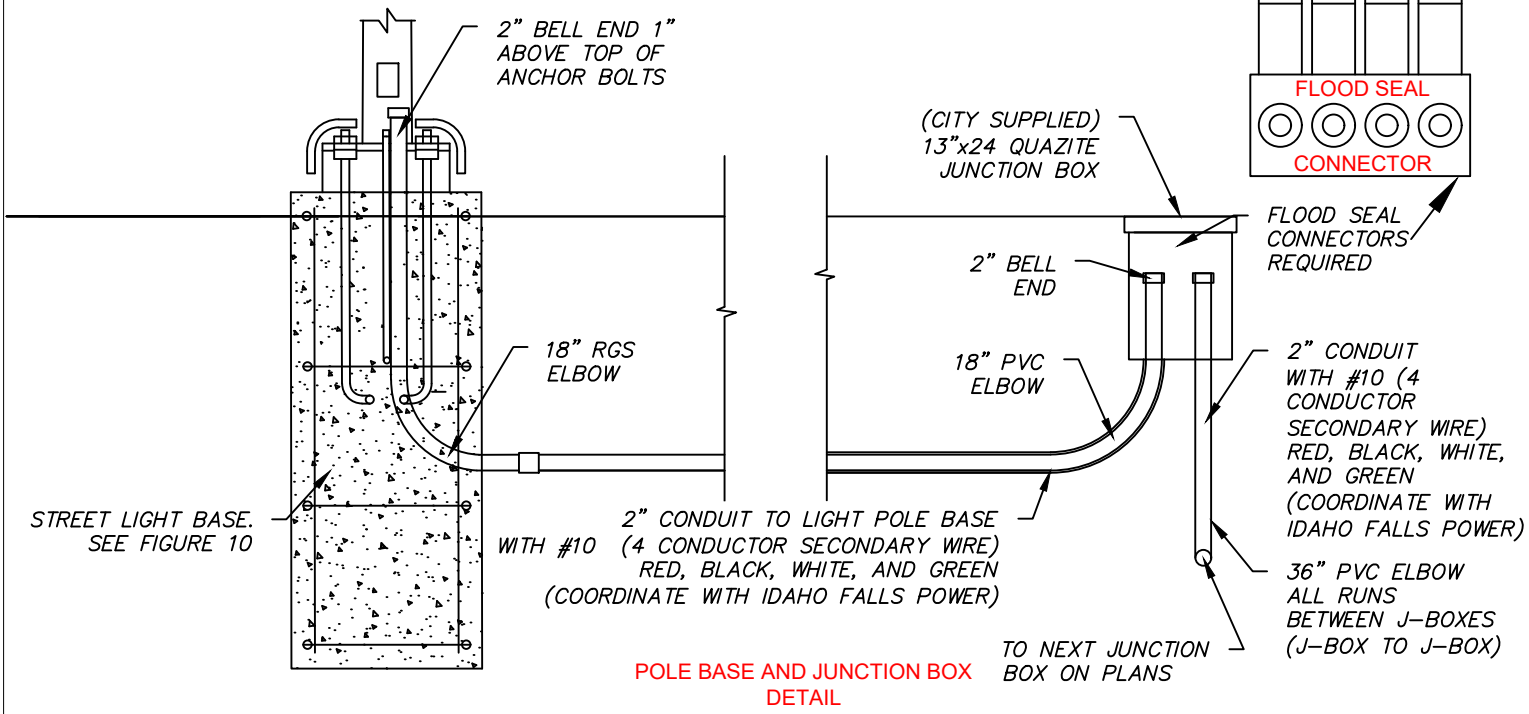

POLE BASE AND JUNCTION BOX DETAIL

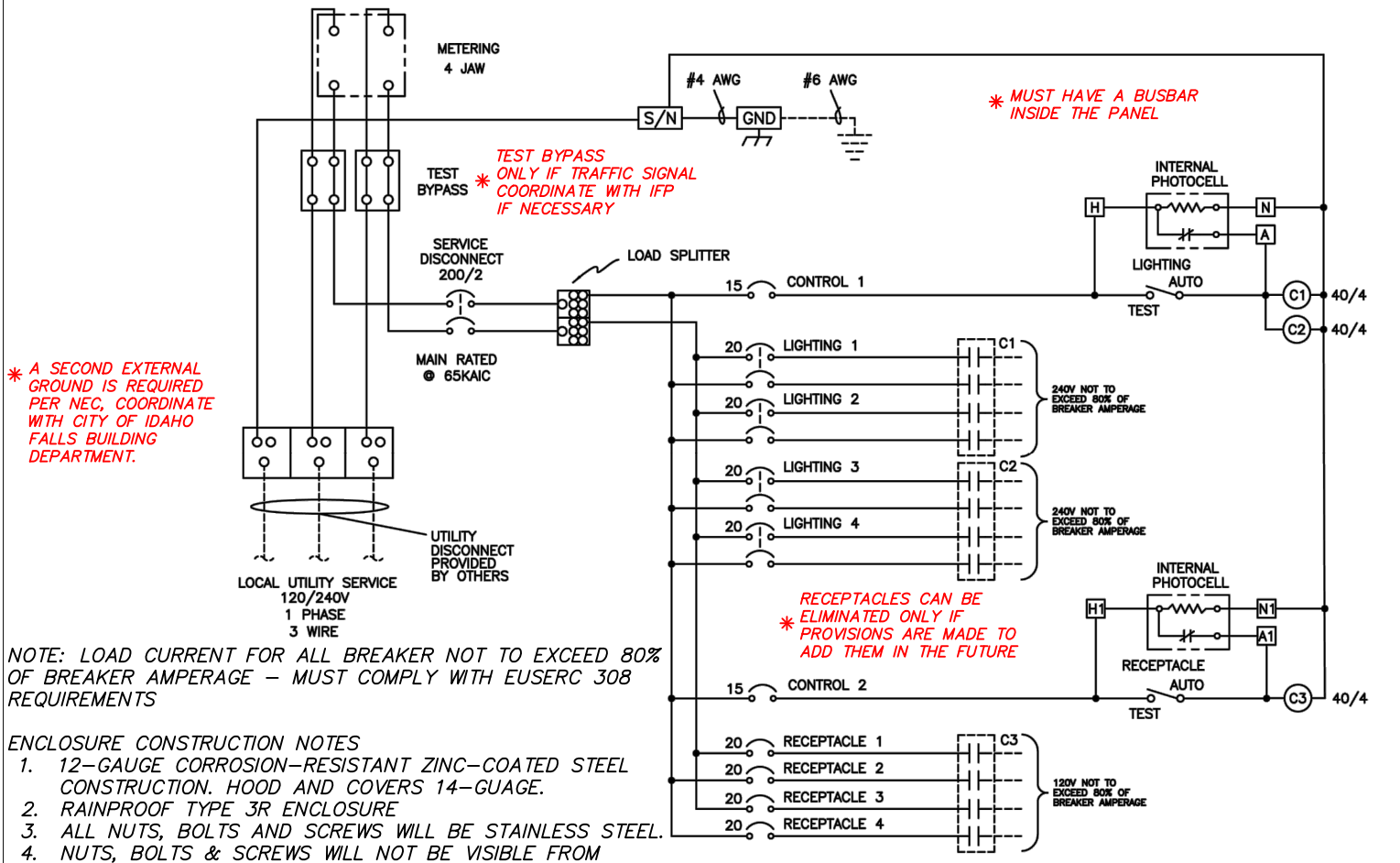

NOTE: LOAD CURRENT FOR ALL BREAKER NOT TO EXCEED 80% OF BREAKER AMPERAGE – MUST COMPLY WITH EUSERC 308 REQUIREMENTS

ENCLOSURE CONSTRUCTION NOTES

1. 12-GAUGE CORROSION-RESISTANT ZINC-COATED STEEL CONSTRUCTION. HOOD AND COVERS 14-GUAGE.
2. RAINPROOF TYPE 3R ENCLOSURE
3. ALL NUTS, BOLTS AND SCREWS WILL BE STAINLESS STEEL.
4. NUTS, BOLTS & SCREWS WILL NOT BE VISIBLE FROM OUTSIDE OF ENCLOSURE.
5. CONTROL WIRING WILL BE MARKED AT BOTH ENDS BY PERMANENT WIRE MARKERS.
6. A PLASTIC COVERED WIRING DIAGRAM WILL BE ATTACHED TO THE INSIDE OF THE FRONT DOOR.
7. ENCLOSURE WILL BE FACTORY WIRED AND CONFORM TO REQUIRED NEMA AND UL 508A STANDARDS.
8. REQUIRED TO HAVE A 100 AMP MAIN SERVICE BREAKER
9. IFP WILL PULL AND PROVIDE THE SECONDARY WIRE IN THE CONTRACTOR'S SUPPLIED CONDUIT BETWEEN THE TRANSFORMER AND THE LIGHTING CONTROL PANEL.

SERVICE EQUIPMENT WIRING DIAGRAM

SEE FIGURE 26 FOR COMMERCIAL LIGHTING CONTROL PANEL AND FOUNDATION DRAWINGS

WIRELESS ANTENNA STEEL STREET LIGHT (PADMOUNTED EQUIPMENT)

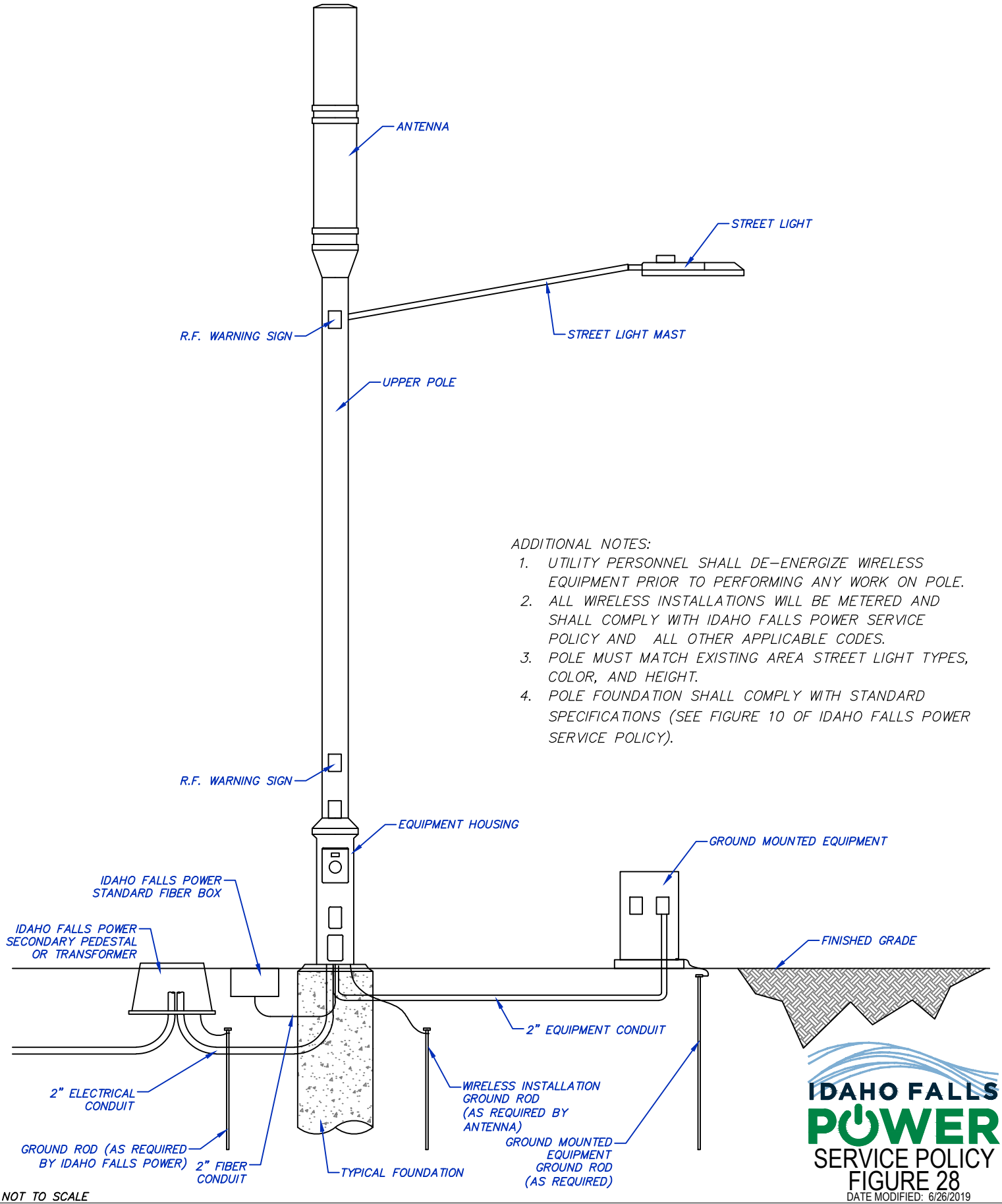

ADDITIONAL NOTES:

1. UTILITY PERSONNEL SHALL DE-ENERGIZE WIRELESS EQUIPMENT PRIOR TO PERFORMING ANY WORK ON POLE.
2. ALL WIRELESS INSTALLATIONS WILL BE METERED AND SHALL COMPLY WITH IDAHO FALLS POWER SERVICE POLICY AND ALL OTHER APPLICABLE CODES.
3. POLE MUST MATCH EXISTING AREA STREET LIGHT TYPES, COLOR, AND HEIGHT.
4. POLE FOUNDATION SHALL COMPLY WITH STANDARD SPECIFICATIONS (SEE FIGURE 10 OF IDAHO FALLS POWER SERVICE POLICY).

IDAHO FALLS POWER

SERVICE POLICY
FIGURE 28
DATE MODIFIED: 6/26/2019

WIRELESS ANTENNA
(STEEL MONO POLE)

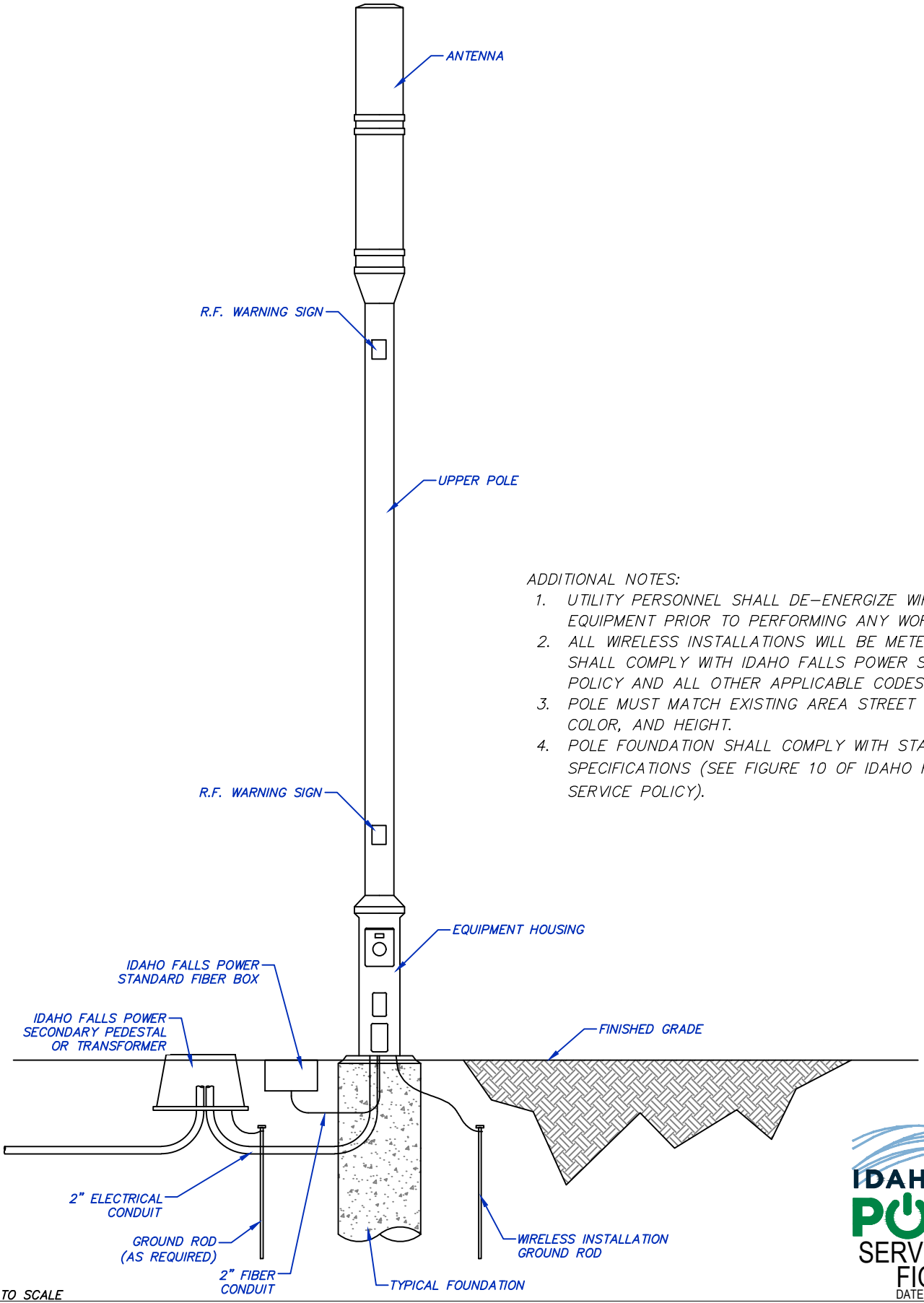

ADDITIONAL NOTES:

1. UTILITY PERSONNEL SHALL DE-ENERGIZE WIRELESS EQUIPMENT PRIOR TO PERFORMING ANY WORK ON POLE.
2. ALL WIRELESS INSTALLATIONS WILL BE METERED AND SHALL COMPLY WITH IDAHO FALLS POWER SERVICE POLICY AND ALL OTHER APPLICABLE CODES.
3. POLE MUST MATCH EXISTING AREA STREET LIGHT TYPES, COLOR, AND HEIGHT.
4. POLE FOUNDATION SHALL COMPLY WITH STANDARD SPECIFICATIONS (SEE FIGURE 10 OF IDAHO FALLS POWER SERVICE POLICY).

NOT TO SCALE

IDAHO FALLS POWER

SERVICE POLICY
FIGURE 29
DATE MODIFIED: 6/26/2019

7' X 12' VAULT

PLAN VIEW

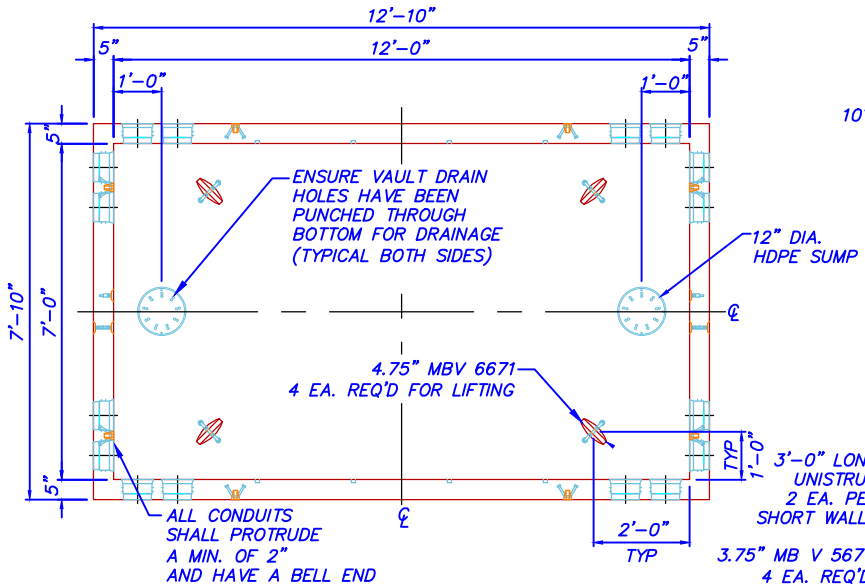

LIFTING DIAGRAM (ISOMETRIC)

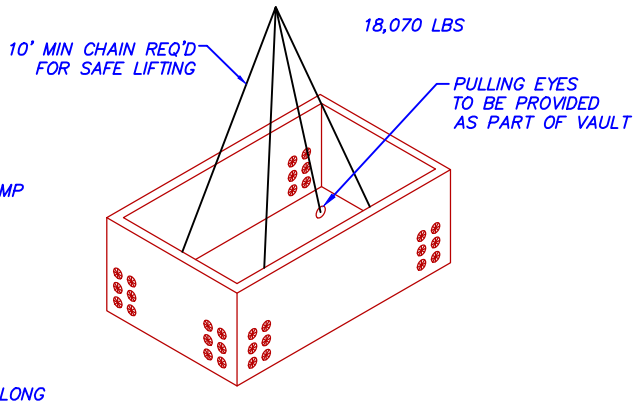

PROFILE VIEW

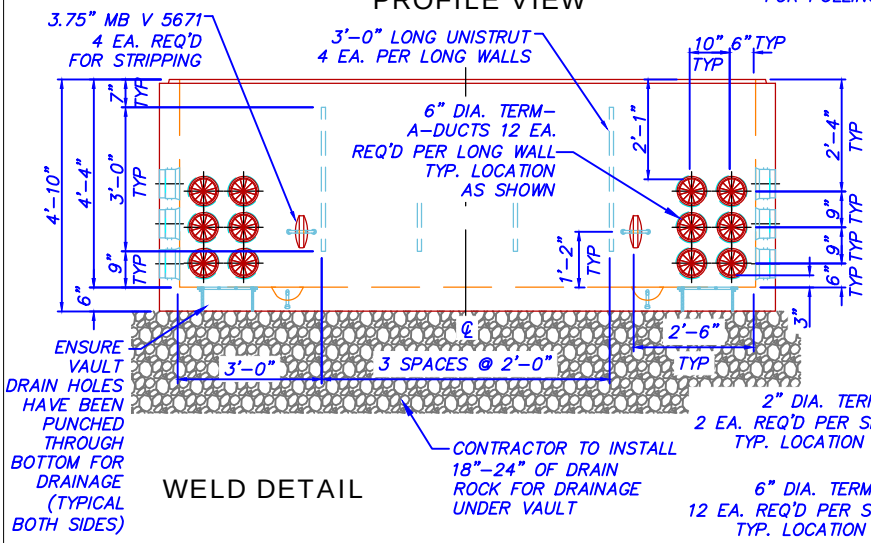

SIDE VIEW

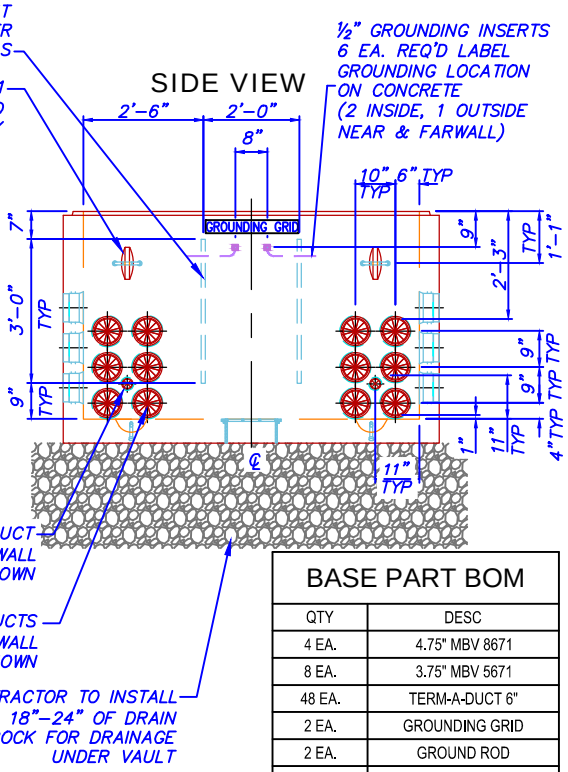

WELD DETAIL

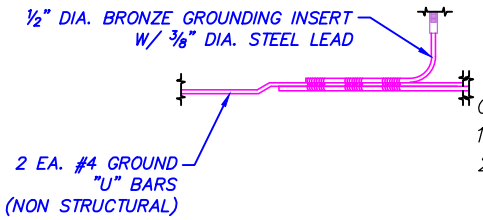

BASE PART BOM

QTY	DESC
4 EA.	4.75" MBV 8671
8 EA.	3.75" MBV 5671
48 EA.	TERM-A-DUCT 6"
2 EA.	GROUNDING GRID
2 EA.	GROUND ROD
4 EA.	TERM-A-DUCT 2" W/ SEAL
36 FT	UNISTRUT P3200
2 EA.	SUMP W/ LID
4.25 YDS	MIX #1 SCC WETCAST
17,850 LBS	HANDLING WEIGHT

JOINT DETAIL

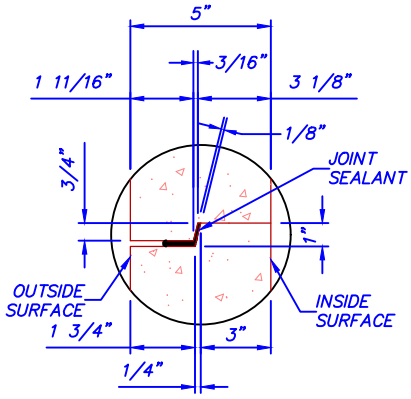

GENERAL NOTES

1. MIN. DESIGN CRITERIA PER ACI–318 CODE & AS NOTED.
2. DESIGN LOADING:
   - 2.1 300 PSF PEDESTRIAN LOAD.
   - 2.2 SOIL WEIGHT = 120 PCF
   - 2.3 DEPTH OF OVERBURDEN: 0'–0" MIN. TO 2'–0" MAX.
   - 2.4 ASSUMED WATER TABLE: 5'–0" BELOW GRADE.
   - 2.5 EQUIV. FLUID PRESSURE = 40 PCF
   - 2.6 LATERAL LIVE LOAD SURCHARGE PER CODE.
3. CONCRETE 28 DAY COMPRESSIVE STRENGTH: 5,000 PSI (MIN)
   STRIPPING STRENGTH: 2,500 PSI (MIN)
4. STEEL REINFORCING:
   BAR: ASTM A–615 GRADE 60
5. CEMENT: TYPE II/V, ASTM C–150 SPECIFICATION
   FLYASH: CLASS F, ASTM C–618 SPECIFICATION
6. CONTRACTOR TO VERIFY PROPER DRAINAGE INSIDE OF VAULT
7. CONTRACTOR TO GROUT OR SEAL AROUND EACH CONDUIT THAT EXTENDS INSIDE OF THE VAULT
8. CONTRACTOR SHALL EXTEND CONDUIT A MIN. OF 2" INSIDE OF VAULT AND CONTRACTOR SHALL INSTALL BELL ENDS

DRAWING COURTESY OF OLDCASTLE INFRASTRUCTURE

NOT TO SCALE

IDAHO FALLS POWER
SERVICE POLICY
FIGURE 30
DATE MODIFIED: 1/19/2021

7' X 12' VAULT LID

PLAN VIEW

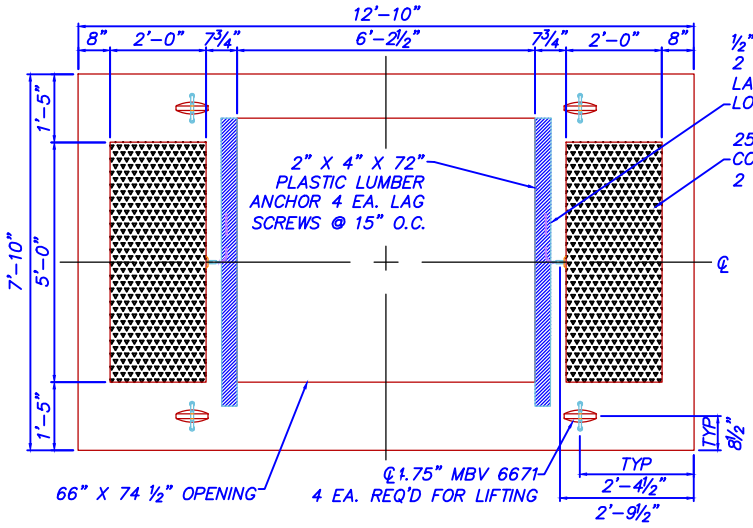

LIFTING DIAGRAM (ISOMETRIC)

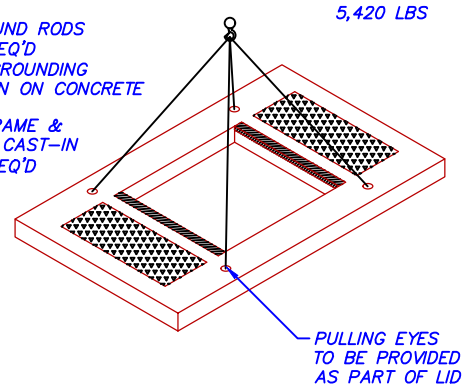

PROFILE VIEW

SIDE VIEW

JOINT DETAIL

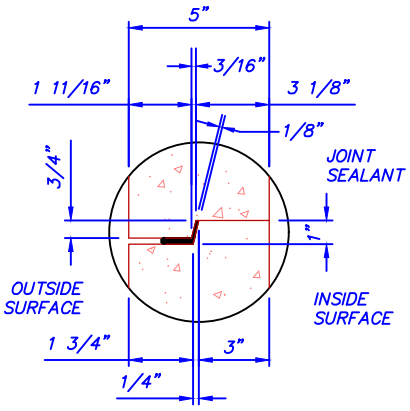

LID PART BOM	
QTY	DESC
4 EA.	4.75" MB V 6671
2 EA.	GROUND RODS
2 EA.	25 TA FRAME
2 EA.	25 TA COVER
11'-0"	PLASTIC LUMBER
1.63 YDS	MIX #1 SCC WETCAST
6,846 LBS	HANDLING WEIGHT
	#5 BAR
	#4 BAR

1. MIN. DESIGN CRITERIA PER ACI-318 CODE & AS NOTED.
2. DESIGN LOADING:
   2.1 300 PSF PEDESTRIAN LOAD.
   2.2 SOIL WEIGHT = 120 PCF
   2.3 DEPTH OF OVERBURDEN: 0'-0"
   2.4 ASSUMED WATER TABLE:
   5'-0" BELOW GRADE.
   2.5 EQUIV. FLUID PRESSURE = 40 PCF
   2.6 LATERAL LIVE LOAD SURCHARGE
   PER CODE.
3. CONCRETE 28 DAY COMPRESSIVE STRENGTH: 5,000 PSI (MIN)
4. STEEL REINFORCING:
   BAR: ASTM A-615 GRADE 60
5. CEMENT: ASTM C-150 SPECIFICATION.
6. USE STD REBAR
7. CONCRETE STRENGTH: 5,000 PSI
8. 2,500 PSI MINIMUM STRIPPING STRENGTH REQUIRED
9. CONTRACTOR TO SEAL LID TO VAULT

DRAWING COURTESY OF
OLDCASTLE INFRASTRUCTURE

IDAHO FALLS POWER
SERVICE POLICY
FIGURE 31
DATE MODIFIED: 1/19/2021

FIBER / POWER SECONDARY TRENCH

PLAN VIEW

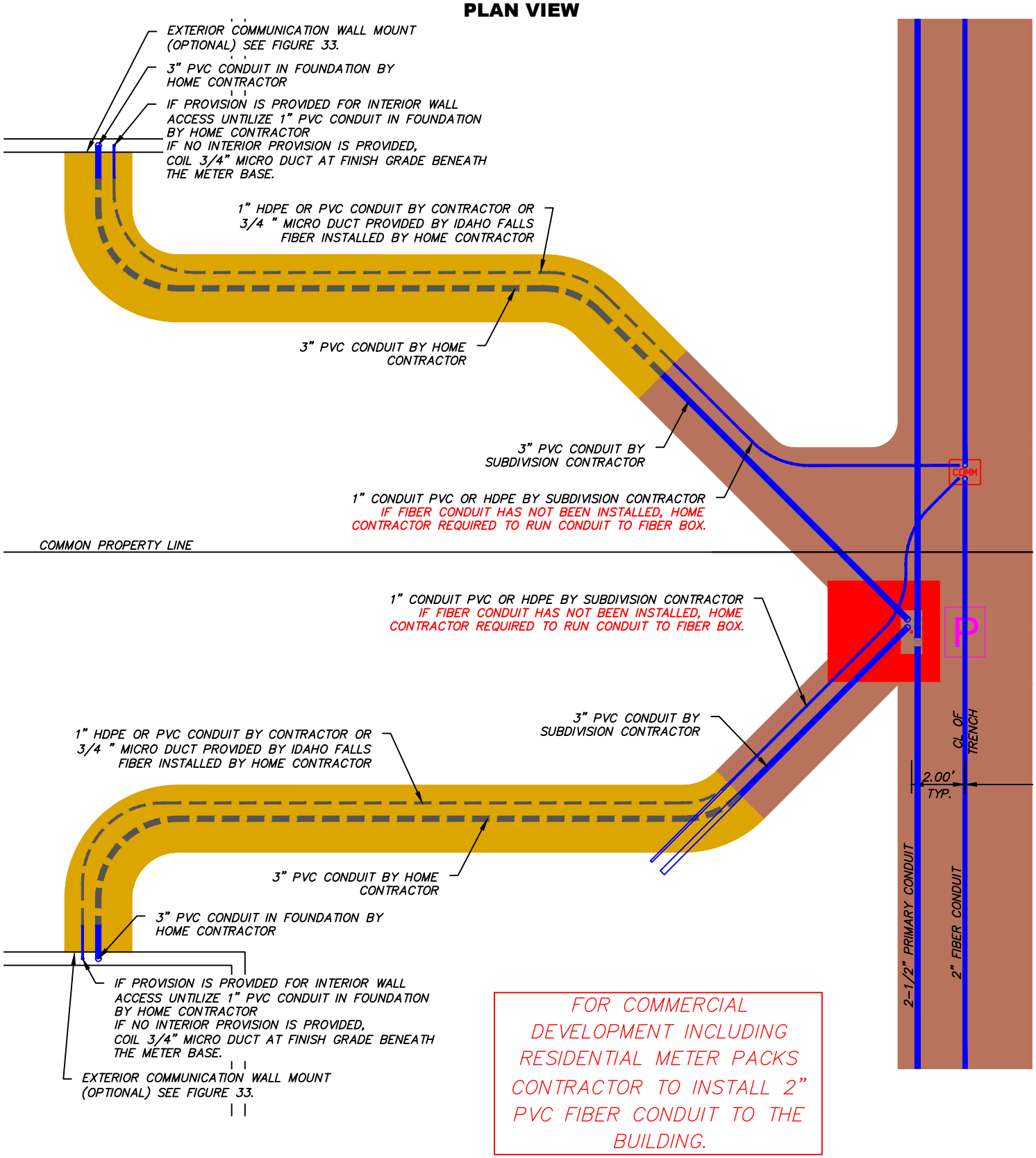

DISTANCES MAY VARY - SEE ELECTRICAL SITE PLANS PRIOR TO CONSTRUCTION

IDAHO FALLS POWER

SERVICE POLICY
FIGURE 32
DATE MODIFIED: 02/25/2026

FIBER WALL MOUNTS
EXAMPLES AND RECOMMENDATIONS

EXAMPLE 1 OF EXTERIOR COMMUNICATION WALL MOUNT

EXAMPLE 2 OF EXTERIOR COMMUNICATION WALL MOUNT

EXAMPLE 3 OF EXTERIOR COMMUNICATION WALL MOUNT

PREFERRED METHOD OF FIBER INSTALLATION

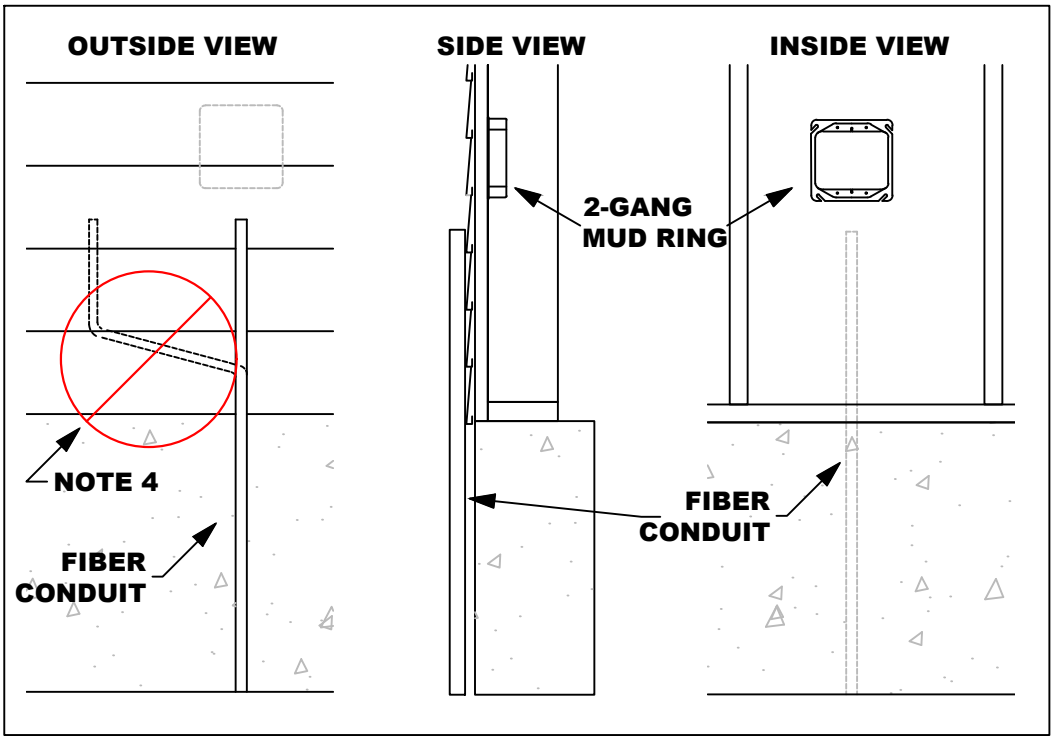

NOTES:

1. FOR CONSTRUCTIONS SIMILAR OR EQUIVALENT TO EXAMPLE 1: IT IS SUGGESTED THAT THE 110V OUTLET BE PLACED IN A CORNER OF THE INTERIOR OF THE ENCLOSURE.
2. FOR CONSTRUCTIONS SIMILAR OR EQUIVALENT TO EXAMPLE 2 OR 3: IT IS SUGGESTED THAT THE ENCLOSURES BE A MINIMUM OF 30 CUBIC INCHES AND THAT BOTH THE MICRODUCT (TUBING FROM THE SECONDARY PEDESTAL) AND INTERDUCT (TUBING TO THE INTERIOR OF THE HOME) ARE CONTAINED IN THE ENCLOSURE.
3. FOR A LIST OF RECOMMENDED WALL MOUNTS CONTACT IDAHO FALLS FIBER.
4. ZERO BENDS IN FIBER CONDUIT.
5. NO CONNECTIONS TO METER BASE, IE. GEN LINK AND SURGE SUPPRESSOR WITHOUT PRIOR APPROVAL FROM IDAHO FALLS POWER (CONTACT IDAHO FALLS POWER / METER DEPARTMENT)

IDAHO FALLS POWER

SERVICE POLICY
FIGURE 33
DATE MODIFIED: 2/1/2024

RESIDENTIAL SECONDARY SERVICE OWNERSHIP

Overhead Electrical Service-Low Building

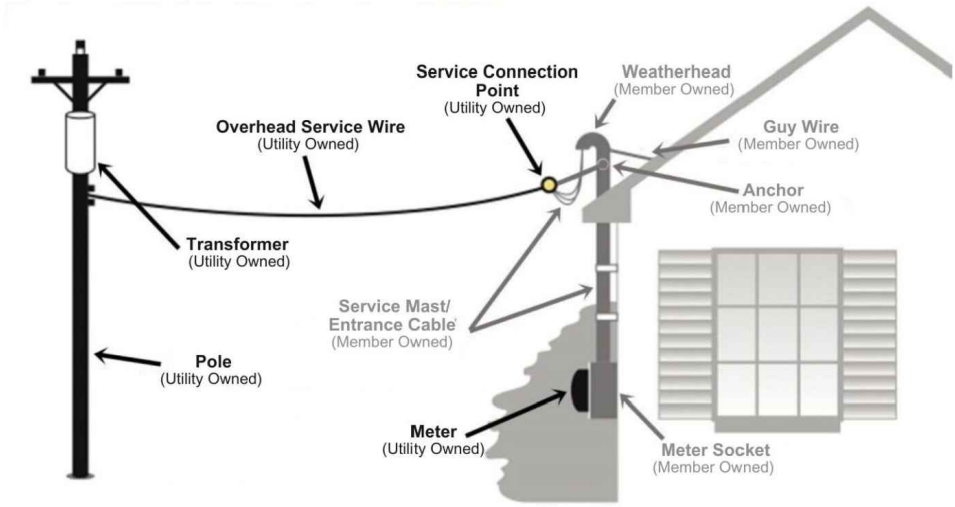

Typical Overhead Electrical Service

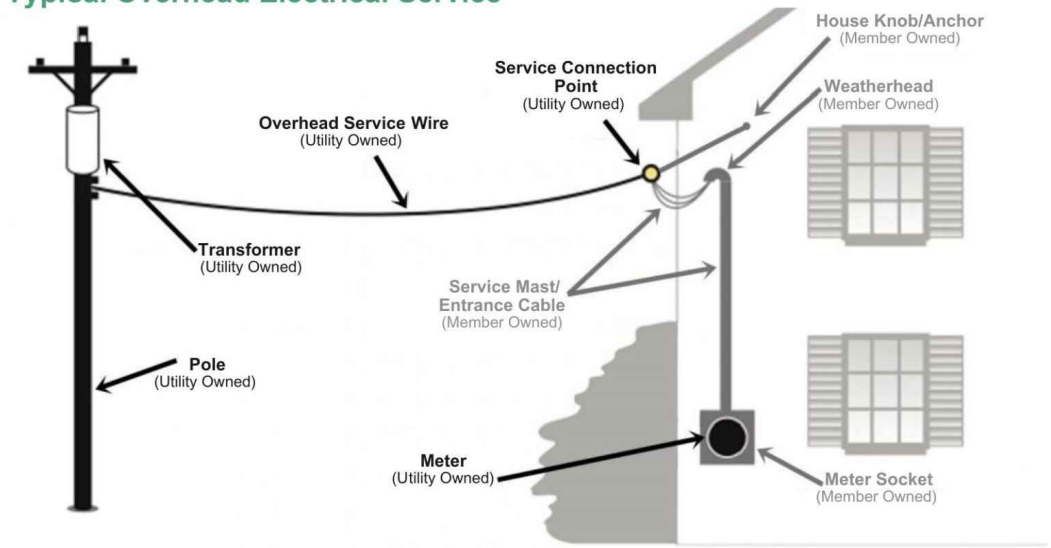

Underground Electrical Service

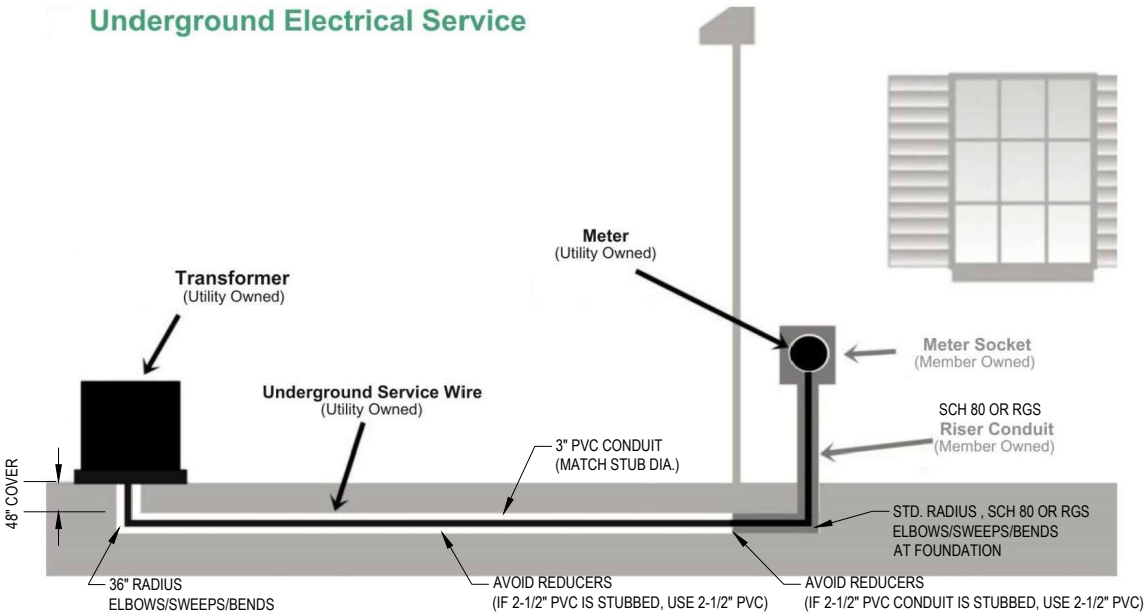

IDAHO FALLS POWER

SERVICE POLICY
FIGURE 34
DATE MODIFIED: 02/25/2026

FIBER GROUND SLEEVE DIMENSIONS (HH-1, HH-3, HH-FP, AND HH-EPED)

GENERAL DIMENSIONS FOR STRUCTURE PLACEMENT

HH-1

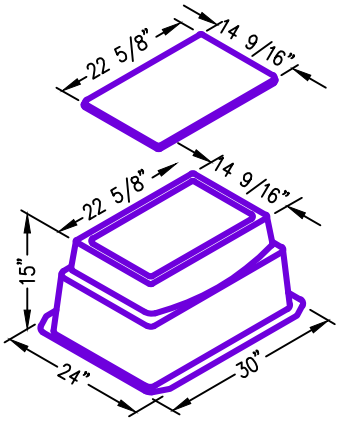

HH-3

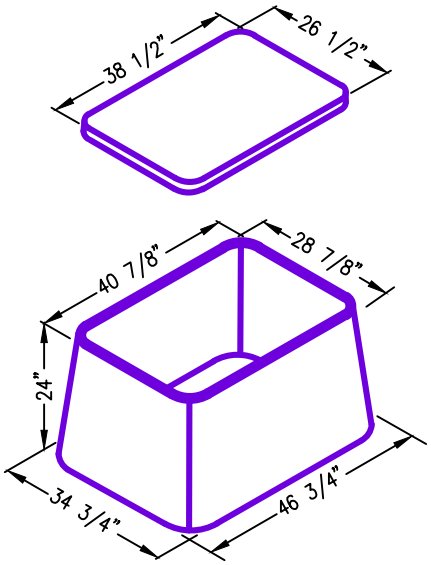

HH-FP

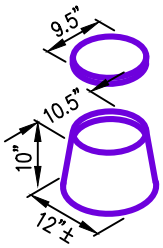

NOTE: SEE FIGURE 7 FOR FINISHED GRADE AND ADDITIONAL DETAILS.

HH-EPED

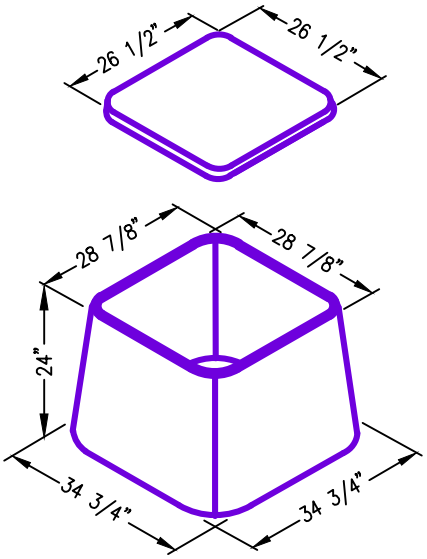

1" = 2'

COORDINATE WITH IDAHO FALLS POWER

IDAHO FALLS POWER

SERVICE POLICY
FIGURE 35
DATE MODIFIED: 01/08/2025